2000225294A.04.04

Instructions for Use
Installation and Servicing

To be left with the user

enviroplus

F24e

G.C. No. 47-920-45

HIGH EFFICIENCY

CONDENSING COMBINATION BOILER

F28e

G.C. No. 47-920-39

HIGH EFFICIENCY

CONDENSING COMBINATION BOILER

F28e SB

G.C. No. 41-920-37

HIGH EFFICIENCY

CONDENSING SYSTEM BOILER

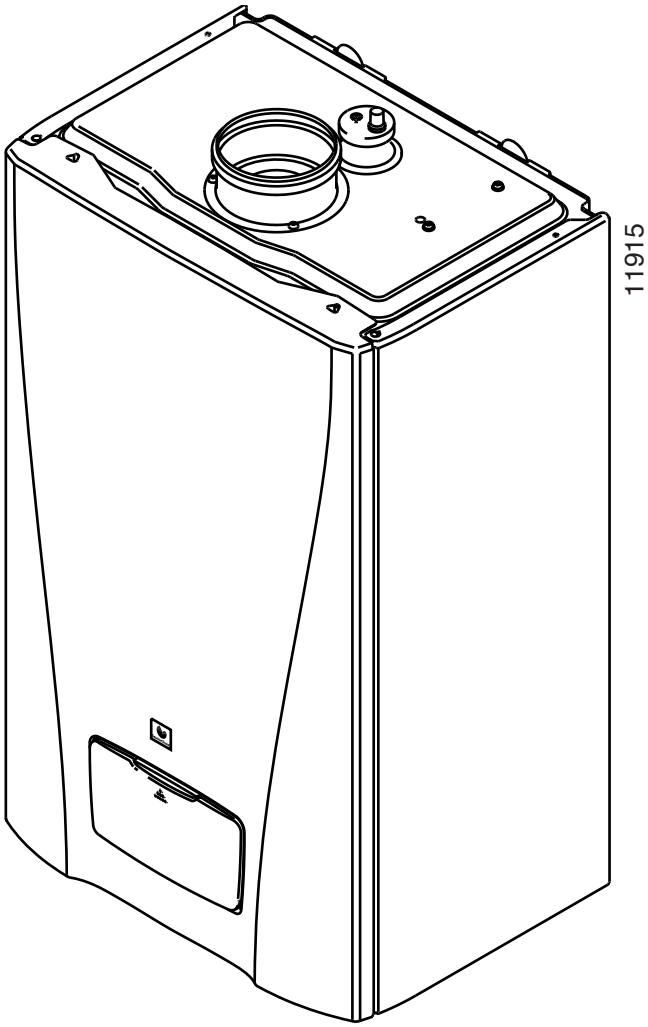

spares & parts online
IBASIS.co.UK©

Saunier Duval

Saunier Duval, Nottingham Road, Belper, Derbyshire. DE56 1JT
www.saunier-duval.co.uk

Guarantee Registration

Thank you for installing a new Saunier Duval appliance in your home.
Saunier Duval appliances' are manufactured to the very highest standard so we are pleased to offer our customers' a Comprehensive Guarantee.
This product is guaranteed for 24 months from the date of installation or 30 months from the date of manufacture, whichever is the shorter, for parts. In addition this product is guaranteed for 12 months from the date of intallation or 18 months from the date of manufacture, whichever is the shorter, for labour.
The second year of the parts guarantee, from the beginning of the 13th month onwards after installation, is conditional upon the boiler having been serviced by a CORGI registered gas installer, in accordance with the manufacturer's recommendations. We strongly recommend regular servicing of your gas appliance, but where the condition is not met, any chargeable spare parts or components issued within the applicable guarantee period still benefit from a 12 month warranty from the date of issue by the manufacturer.

We recommend you complete and return as soon as possible your guarantee registration return literature, supplied in the document envelope.

If your guarantee registration return literature is missing you can obtain a copy by telephoning

the Saunier Duval Customer Service number 0044(0)1773 525914.

RECORD YOUR SAUNIER DUVAL APPLIANCE DIRECT BY CALLING

0044 (0)870 240 3413

Customer service :

Saunier Duval GB Great Britain :
Tel. 00 44 (0)1773 525914
Fax. 00 44 (0)1773 828070
Saunier Duval,
Nottingham Road, Belper, Derbyshire. DE56 1JT

Saunier Duval IE IRELAND:
Tel. 00 353 (0)14191919
Fax. 00 353 (0)14584806
Hevac,
Muirfield Drive
Naas Road
Dublin 12

Technical Advice Line:

Tel. 00 44 (0)1773 828400

General and Sales enquiries:

Tel. 00 44 (0)870 606 4351
Fax. 00 44 (0)1773 820569

benchmark
The code of practice for the installation, commissioning & servicing of gas central heating

Contents

The instructions consist of three parts, User, Installation and Servicing Instructions, which includes the Guarantee Registration Card. The instructions are an integral part of the appliance and must, to comply with the current issue of the Gas Safety (Installation and Use) Regulations, be handed to the user on completion of the installation.

CONTENTS	DESCRIPTION	SECTION	PAGE No.
INTRODUCTION	Important Information		4
	Manual Handling		5
INSTRUCTIONS FOR THE USER	Appliance Introduction		7
	Appliance Safety Devices		7
	General Information		8
	Maintenance and Servicing		8
	Operating the Boiler		9
	(F24e & F28e ONLY) Optional Programmer		11
INSTALLATION INSTRUCTIONS	Technical Data	1	13
	Technical Information	2	15
	Heating System Design	3	16
	(F24e & F28e ONLY) Domestic Hot Water System Design	4	17
	Boiler Schematic	5	18/19
	Boiler Location, Flue and Ventilation	6	20
	Installation Preparation and Appliance Fixing	7	22
	Horizontal Top Flue Preparation and Fitting	8	23
	Vertical Flue Preparation and Fitting	8	26
	Twin Flue Preparation and Fitting	8	28
	Gas/Water Connections	9	32
	Safety Discharge Valve and Condensate Connections	10	35
	Electrical Connections	11	37
	Commissioning	12	39
SERVICING INSTRUCTIONS	Servicing	13	41
	Fault Finding	14	46
	Wiring Diagram	15	50/51
	Replacement of Parts	16	52
	Spare Parts	17	63

WARNINGS

Gas Leak or Fault

Turn off the gas emergency control valve immediately. Eliminate all sources of ignition, i.e.smoking, blowlamps, hot air guns etc. Do not operate electrical lights or switches either on or off. Open all doors and windows,ventilate the area.

Sheet Metal Parts

This boiler contains metal parts (components) and care should be taken when handling and cleaning, with particular regard to edges.

Sealed Components

Under no circumstances must the User interfere with or adjust sealed parts.

Gas Category

The boilers are of the I_{2H} category for use with **Natural Gas (G20)** as distributed in the United Kingdom and Ireland and cannot be used on any other gas.

Gas Safety (Installation and Use) Regulations

In your own interests and that of safety, it is the Law that ALL gas appliances must be installed by a **competent person only,** in accordance with the current issue of the above regulations.

Testing and Certification

This boiler is tested and certificated for safety and performance. It is, therefore, important that no alteration is made to the boiler, without permission, in writing, from Saunier Duval.

Any alteration not approved by Saunier Duval, could invalidate the certification, boiler warranty and may also infringe the current issue of the statutory requirements.

Mandatory WARNING for EEC countries

This appliance is designed, approved and inspected to meet the requirements of the intended market. The data label indicates where the product was manufactured and the country for which it is intended.

CE Mark

This boiler meets the requirements of Statutory Instrument, No. 3083 The Boiler (Efficiency) Regulations, and therefore is deemed to meet the requirements of Directive 92/42/EEC on the efficiency requirements for new hot water boilers fired with liquid or gaseous fuels.

Type test for purposes of Regulation 5 certified by: Notified body 0063.

Product/production certified by: Notified body 0086.

The CE mark on this appliance shows compliance with:

1. Directive 90/396/EEC on the approximation of the laws of the Member States relating to appliances burning gaseous fuels.

2. Directive 73/23/EEC on the harmonisation of the Laws of the Member States relating to electrical equipment designed for use within certain voltage limits.

3. Directive 89/336/EEC on the approximation of the Laws of the Member States relating to electromagnetic compatibility.

Control of Substances Hazardous to Health

Under Section 6 of The Health and Safety at Work Act 1974, we are required to provide information on substances hazardous to health.

The adhesives and sealants used in this appliance are cured and give no known hazard in this state.

Insulation Pads / Ceramic Fibre

These can cause irritation to skin, eyes and the respiratory tract.

If you have a history of skin complaint you may be susceptible to irritation. High dust levels are usual only if the material is broken.

Normal handling should not cause discomfort, but follow normal good hygiene and wash your hands before eating, drinking or going to the lavatory.

If you do suffer irritation to the eyes or severe irritation to the skin seek medical attention.

Electrical Supply

The boiler must be earthed.

All system components shall be of an approved type and all wiring to current I.E.E. wiring regulations.

External wiring must be correctly earthed, polarised and in accordance with the relevant standards.

In GB this is BS 6891.

In IE this is the current edition of I.S.813 "Domestic Gas Installations".

The boiler must be connected to a permanent 230V ac, 50Hz supply.

Connection of the whole electrical system of the boiler, including any heating controls, to the electrical supply must be through one common isolator and must be fused 3 Amp maximum.

Isolation should be by a double pole switched fused spur box, with a minimum gap of 3mm for both poles. The fused spur box should be readily accessible and preferably adjacent to the appliance. It should be identified as to its use.

Alternatively connection can be made through an unswitched shuttered socket and 3A fused 3-pin plug both to the current issue of BS 1363 may be used, provided they are not used in a room containing a bath or shower.

Wiring to the boiler must be PVC 85°C insulated cable, not less than 0.75mm^2 (24/0.20mm).

Introduction - Manual Handling

IMPORTANT. With regards to the Manual Handling Operations, 1992 Regulations, the following lift operations are recommended as the appliance weight exceeds a one man lift.

General recommendations when handling

Clear the route before attempting the lift.

Ensure safe lifting techniques are used - keep back straight - bend using legs.

Keep load as close to body as possible.

Do not twist - reposition feet instead.

If 2 persons performing lift, ensure co-ordinated movements during lift.

Avoid upper body/top heavy bending - do not lean forward/ sideways.

Recommend wear suitable cut resistant gloves with good grip to protect against sharp edges and ensure good grip.

Always use assistance if required.

Removal of carton from delivery van

Recommend 2 person lift or 1 person with use of sack truck. If 1 person is performing lift, straddle the load, tilt and place carton into position on truck. Recommend secure appliance onto truck with suitable straps. Ensure safe lifting techniques are used - keep back straight - bend using legs. Keep load as close to body as possible. If 2 persons performing lift, ensure co-ordinated movements during lift. Always use assistance if required.

Carriage of carton from point of delivery to point of installation - ground floor

Recommend 2 person lift or 1 person with use of sack truck. If 1 person is performing lift, straddle the load, tilt and place carton into position on truck. Recommend secure appliance onto truck with suitable straps. Ensure safe lifting techniques are used - keep back straight - bend using legs. Keep load as close to body as possible. If 2 persons performing lift, ensure co-ordinated movements during lift. Clear the route before attempting the lift. If removing boiler from truck straddle the load and tilt forwards to facilitate secure grip. Ensure safe lifting techniques are used - keep back straight - bend using legs. Do not twist - reposition feet instead. Take care to avoid trip hazards, slippery or wet surfaces and when climbing steps and stairs. Always use assistance if required.

Carriage of carton from point of delivery to point of installation - first or higher floor, cellar.

Recommend 2-person lift or 1 person with use of sack truck. If 1 person is performing lift, straddle the load, tilt and place carton into position on truck. Recommend secure appliance onto truck with suitable straps. Ensure safe lifting techniques are used - keep back straight - bend using legs. Keep load as close to body as possible. If 2 persons performing lift, ensure co-ordinated movements during lift. Avoid upper body/top heavy bending - do not lean forward/sideways. Clear the route before attempting the lift. If removing boiler from truck straddle the load and tilt forwards to facilitate secure grip. Ensure safe lifting techniques are used - keep back straight - bend using legs. Do not twist - reposition feet instead. Take care to avoid trip hazards, slippery or wet surfaces and when climbing steps and stairs. Always use assistance if required.

Carriage of carton from point of delivery to point of installation - roofspace.

Recommend 2-person lift. Ensure co-ordinated movements during lift. Avoid upper body/top heavy bending - do not lean forward/sideways. Clear the route before attempting the lift. Take care to avoid trip hazards, slippery or wet surfaces and when climbing steps and stairs. When transferring appliance into roofspace, recommend 1 person to be in roofspace to receive the appliance and other person to be below to pass up and support appliance. Ensure safe lifting techniques are used - keep back straight - bend using legs. Keep load as close to body as possible. Always use assistance if required. It is assumed safe access, flooring and adequate lighting are provided in the roof space. It is recommended a risk assessment of the roof space area be carried out before moving the appliance into the area to take into account access, stability of flooring, lighting and other factors, and appropriate measures taken.

Unpacking of Appliance from carton.

Recommend 2 persons unpack appliance from carton. Always keep working area clear. Recommend cut base end of carton and open carton flaps, then tilt boiler forwards from its side onto its base and remove carton by sliding up over the boiler. Ensure safe lifting techniques are used - keep back straight - bend using legs. Keep load as close to body as possible. Always use assistance if required. Dispose of packaging in a responsible manner. Recommend wear suitable cut resistant gloves with good grip to protect against sharp edges and ensure good grip when handling appliance outside packaging.

Positioning of Appliance for Final Installation - no obstructions.

Recommend 2 persons lift appliance to position into place. Fit bracket securely onto wall before lifting appliance into position. Obtain firm grip on front and sides of appliance, lift upwards, ensure stable balance achieved and lift upwards to position in place on bracket. Ensure safe lifting techniques are used - keep back straight - bend using legs - when lifting load from floor level. Do not twist - reposition feet instead. Keep boiler as close as possible to body throughout lift to minimise strain on back. Ensure co-ordinated movements to ensure equal spread of weight of load. Always use assistance if required. Recommend wear suitable cut resistant gloves with good grip to protect against sharp edges and ensure good grip when handling appliance.

Positioning of Appliance for Final Installation - above worktop, foreseeable obstructions etc.

Recommend 2 persons lift appliance to position into place. Fit bracket securely onto wall before lifting appliance into position. Obtain firm grip on front and sides of appliance, lift upwards, onto worktop if practicable. Ensure stable balance achieved and lift upwards to position in place on bracket. If 2 persons positioning onto bracket obtain firm grip at front and sides/base of boiler. Ensure co-ordinated movements during 2 person lifts to ensure equal spread of weight of load. Ensure safe lifting techniques are used - keep back straight - bend using legs - when lifting load from floor level. Do not twist - reposition feet instead. Keep boiler as close as possible to body throughout lift to minimise strain on back. Avoid upper body/top heavy bending - do not lean forward/sideways. Always use assistance if required. Recommend wear suitable cut resistant gloves with good grip to protect against sharp edges and ensure good grip when handling appliance.

Positioning of Appliance for Final Installation - within compartment etc. restricting installation.

Recommend 2 persons lift appliance to position into place, space permitting. Fit bracket securely onto wall before lifting appliance into position. Obtain firm grip on front and sides of appliance, lift upwards, onto worktop if practicable. Ensure stable balance achieved and lift upwards to drop into place onto bracket. If 2 persons positioning onto bracket obtain firm grip at front and sides/base of boiler. Ensure co-ordinated movements during 2 person lifts to ensure equal spread of weight of load. If 1 person positioning onto bracket recommend obtain firm grip supporting base of boiler. Ensure safe lifting techniques are used - keep back straight - bend using legs - when lifting load from floor level. Do not twist - reposition feet instead. Keep boiler as close as possible to body throughout lift to minimise strain on back. Always use assistance if required. Recommend wear suitable cut resistant gloves with good grip to protect against sharp edges and ensure good grip when handling appliance.

Positioning of Appliance for Final Installation - in roof space restricting installation.

Recommend 2 persons lift appliance to position into place, space permitting. Fit bracket securely onto wall before lifting appliance into position. Obtain firm grip on front and sides of appliance, lift upwards, ensure stable balance achieved and lift upwards to drop into place onto bracket. If 2 persons positioning onto bracket obtain firm grip at front and sides/base of boiler. Ensure co-ordinated movements during 2 person lifts to ensure equal spread of weight of load. If 1 person positioning onto bracket recommend obtain firm grip supporting base of boiler. Ensure safe lifting techniques are used - keep back straight - bend using legs - when lifting load from floor level. Do not twist - reposition feet instead. Keep boiler as close as possible to body throughout lift to minimise strain on back. Always use assistance if required. Recommend wear suitable cut resistant gloves with good grip to protect against sharp edges and ensure good grip when handling appliance. It is recommended a risk assessment of the roof space area be carried out before moving the appliance into the area to take into account access, stability of flooring, lighting and other factors, and appropriate measures taken.

User Instructions - Appliance Introduction

The **EnviroPlus F24e & F28e** boilers are wall mounted high efficiency condensing combination boilers with electronic ignition providing central heating and instantaneous hot water.

The **EnviroPlus F28e SB** boiler is a wall mounted high efficiency condensing system boiler with electronic ignition providing central heating and indirect hot water.

Both the central heating and domestic hot water (F24e & F28e only) temperature are user adjustable.

F24e & F28e ONLY Domestic hot water demand always has priority over heating demand.

The boiler is designed for use as part of a sealed water central heating system with fully pumped circulation. The pump, expansion vessel and associated safety devices are all fitted within the boiler.

The boilers have fan assisted balanced flues which both discharges the products of combustion to and draws the combustion air from the outside of the room.

The boilers are suitable for horizontal top, vertical flue or twin-pipe flue system connection. Refer to section 8 of these instructions and the Saunier Duval flue options guide (available from your nearest stockist) for further information.

Manufacturer's instructions must not be taken as overriding statutory requirements. Reference in these instructions to British standards and statutory regulations/requirements apply only to the United Kingdom. For Ireland the current edition of I.S.813 "Domestic Gas Installations" must be used.

These instructions should be carefully followed for the safe and economical use of your boiler.

Note: The boiler serial number is marked on the data label attached to the inner casing panel. The 'Controls & lighting' section describes how to safely use the boiler.

Accessories

A range of accessories are available.

For further information contact your supplier.

User Instructions - Appliance Safety Devices

Overheating safety

In the event of the boiler overheating the safety devices will cause a safety shutdown. If this happens, call your installation/ servicing company.

Electrical supply failure

The boiler will not operate without an electrical supply. Normal operation of the boiler should resume when the electrical supply is restored.

Reset any central heating system controls, to resume normal operation.

If the boiler does not resume normal operation turn the mains reset switch off and on. If the boiler does not resume normal operation call your installation/servicing company.

Heating safety valve

CAUTION: A Safety Valve with a discharge pipe is fitted to this boiler.

The valve **MUST NOT BE TOUCHED** except by a **competent person**. If the valve discharges at any time, switch the boiler off and isolate it from the electrical supply. Contact your installation/ service company.

Frost protection

The appliance has a built in frost protection device that protects the boiler from freezing. With the gas and electric supplies ON and irrespective of any room thermostat setting, the frost protection device will operate the pump when the temperature of the boiler water falls below 7°C.

The burner will fire if the temperature inside the boiler falls to 3°C.

When the temperature reaches 10°C the boiler stops.

Any other exposed areas of the system should be protected by a separate frost thermostat.

User Instructions - General Information

IMPORTANT NOTE:

Please be advised that the 'Benchmark' logbook should be completed by the engineer on completion of commissioning or servicing.

All CORGI Registered Installers carry a CORGI ID card, and have a registration number. Both should be recorded in your benchmark Logbook. You can check your installer is CORGI registered by calling CORGI direct on: 01256 372300.

Water Treatment

In the case of an existing installation, it is **ESSENTIAL** that prior to installing the new boiler the system is thoroughly flushed.

For optimum performance after installation of a new system, the boiler and its associated central heating system should also be flushed. Flushing should be carried out in accordance with BS7593: 1992 using a cleanser such as Sentinel X300 or X400, Fernox Superfloc or Salamander corrosion guard cleaner.

For long-term corrosion protection, after flushing, an inhibitor suitable for stainless steel exchangers should be used, refer to the current issue of BS 5449 and BS 7593 on the use of inhibitors in central heating systems. Examples are Sentinel X100 Fernox or Salamander corrosion guard inhibitor.

Compartment Installations

If the boiler is fitted into a compartment it does not require ventilation openings.

Do not use the compartment for storage.

The boiler is not suitable for cupboard installation.

Clearances

If fixtures are positioned close to the boiler, space must be left as shown in **section 2**. Enough space must also be left in front of the boiler to allow for servicing.

Condensate Drain

The condensate drain, **see section 10.2**, must not be modified or blocked.

Pluming from flue terminal

Like all condensing boilers this appliance will produce a plume of condensation from the flue terminal in cool weather. This is due to the high efficiency and hence low flue gas temperature of the boiler. It is normal and not a fault indication.

Electrical and Gas Supplies

If the mains electricity and gas are to be turned off for any long periods during severe weather, it is recommended that the whole system, including the boiler, should be drained to avoid the risk of freezing. Make sure that, if fitted, the immersion heater in the cylinder is switched off.

If you have a sealed water system contact your installation/ servicing company as draining, refilling and pressurising MUST be carried out by a **competent person**.

User Instructions - Maintenance and Servicing

Draining and filling

Caution: The boiler is installed as part of a sealed system which must only be drained and filled by a **competent person**.

If the boiler is to be out of use for any long periods during severe weather conditions, it is recommended that the whole system, including the boiler, be drained to avoid the risk of freezing.

If in doubt, consult your installation/servicing company.

Cleaning

WARNING: This appliance contains metal parts (components) and care should be taken when handling and cleaning with particular regard to edges of sheet metal parts to avoid any possibility of personal injury.

The boiler casing can be cleaned using a mild liquid detergent with a damp cloth, then a dry cloth to polish.

Do not use any form of abrasive or solvent cleaner as you may damage the paintwork.

Do not use abrasive or solvent cleaners.

Maintenance and Servicing

To ensure the continued efficient and safe operation of the appliance it is recommended that it is checked and serviced as necessary at regular intervals. The frequency of servicing will depend upon the particular installation conditions and usage, refer to guarantee registration on the front cover of this literature.

If this appliance is installed in a rented property there is a duty of care imposed on the owner of the property by the current issue of the Gas Safety (Installation and Use) Regulations, Section 35.

Servicing/maintenance should be carried out by a **competent person** in accordance with the rules in force in the countries of destination.

To obtain service, please call your installer or Saunier Duval service organisation using the telephone number on the front cover of this literature.

Spare Parts

REMEMBER, When replacing a part on this appliance, use only spare parts that you can be assured conform to the safety and performance specification that we require. Do not use reconditioned or copy parts that have not been clearly authorised by Saunier Duval.

If a part is required contact Saunier Duval Service using the telephone number on the inside front cover of this booklet.

Please quote the name of the appliance, this infomation will be on the name badge on the front of the appliance.

If in doubt seek advice from the local gas company or Saunier Duval service organisation using the telephone number on the inside front cover of this booklet.

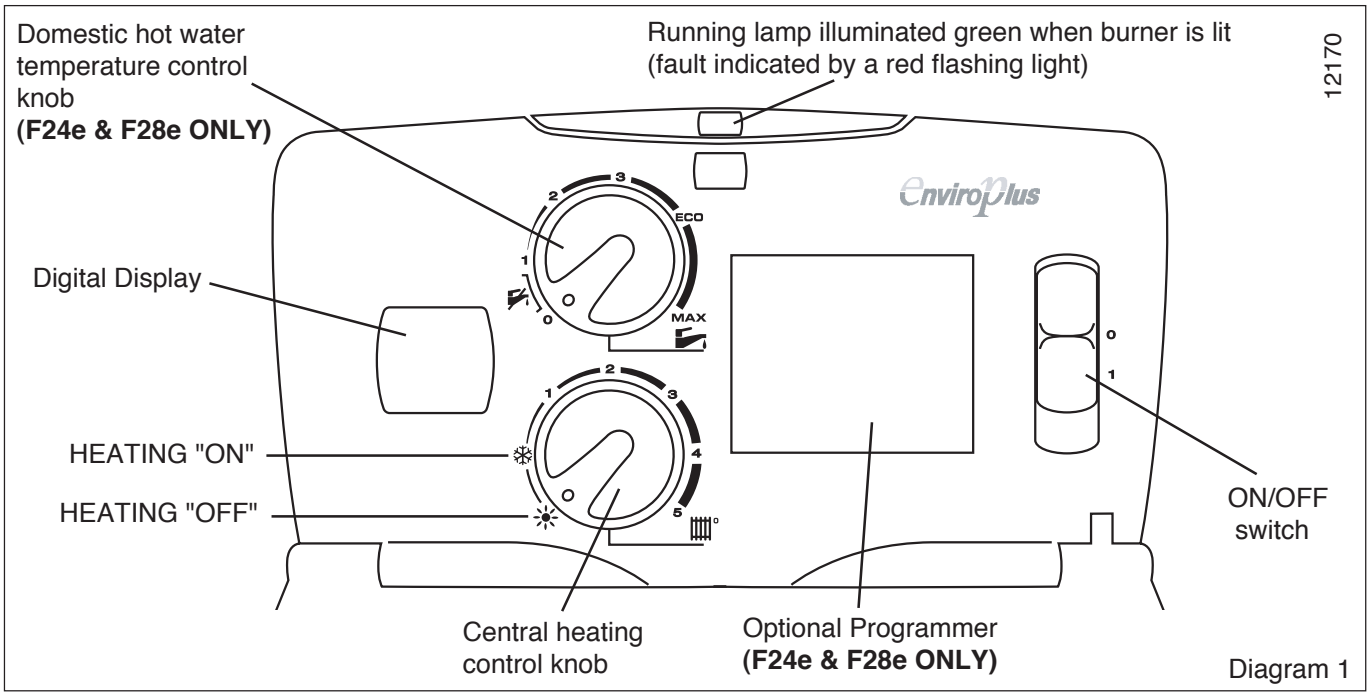

Diagram 1

OPERATION OF THE BOILER

1. Check that all isolating valves on the boiler are open and that water flows from the hot water tap.
2. If you are in any doubt about the boiler being filled with water contact your installer or Saunier Duval's own service organisation using the telephone number on the inside front cover of this booklet.
3. Check that the electrical supply to the boiler is ON and set any remote controls as required.
4. With the User controls in their "OFF" positions, as shown in the above diagram, turn the ON/OFF switch to the ON (**1**) position, the running lamp will initially illuminate (green) then go off, the system pressure will be displayed and should read on the digital display, at least 0.7bar (recommended 1.0bar), if less, pressurise as described in the System Pressurisation section.

USER CONTROLS

CENTRAL HEATING CONTROL

1. Turn the central heating knob "ON", the lighting sequence will begin, the running lamp will illuminate (green) to indicate the boiler has lit, the system temperature will now be displayed instead of system pressure.

   The temperature of the central heating water can be adjusted by turning the central heating control knob to desired setting between **1** 'Min' and **5** 'Max' or ❄ frost protection. **5** 'Max', is appoximately 87°C.

   Set the control knob to ☀ to switch off heating.

   If the boiler fails to light, reset the controls, see paragraph below, **TO RESET**

   If a fault occurs the running lamp will flash red and a fault code will appear on the digital display.

DOMESTIC HOT WATER CONTROL (F24e & F28e ONLY)

2. Position **0** - hot water OFF. Position **1** - hot water between 38°C and 55°C approx.

   The **ECO** setting is recommended and ideally suited to normal family use (showers, washing up etc.).

   Positions between **ECO** and **MAX** are for occasional use, for water above 55°C approx.

TO RESET

3. Turn the ON/OFF switch to **0**, wait for 5 seconds, turn ON/OFF switch to **1**, the boiler is reset.

   If the fault persists contact your installer/service provider using the telephone number on the inside font cover of this booklet.

TO TURN THE BOILER OFF

4. Turn the ON/OFF switch to the OFF (**0**) position.

   Turn the gas supply OFF at the gas service cock if the boiler is to be out of use for some time.

System Pressurisation

(F24e & F28e ONLY) If the digital display shows pressure less than 0.7bar, re-pressurise the system to 1bar by gently opening the built in filling taps underneath the boiler, see **diagram 2**. Tap extension tools are provided to facilitate this.

Using the tap extensions connected to tap (a) and tap (b) open tap (b) and then slowly open tap (a). Re-pressurise the system to a pressure of 1.0 bar indicated on the digital display. When the system is pressurised **you must** close tap (b) and then tap (a).

If the system repeatedly loses pressure, YOU MUST CONTACT YOUR INSTALLER OR SAUNIER DUVAL'S OWN SERVICE ORGANISATION USING THE TELEPHONE NUMBER ON THE INSIDE FRONT COVER OF THIS BOOKLET.

(F28e SB ONLY) This sealed water system must be filled and pressurised by a **competent person**.

YOU MUST CONTACT YOUR INSTALLER OR SAUNIER DUVAL'S OWN SERVICE ORGANISATION USING THE TELEPHONE NUMBER ON THE INSIDE FRONT COVER OF THIS BOOKLET.

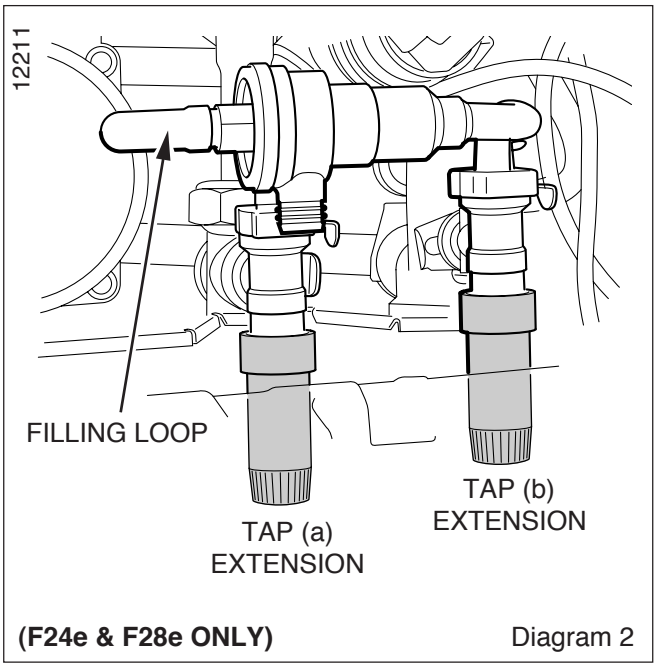

(F24e & F28e ONLY) Diagram 2

To Turn the Boiler Off

There is a mains reset switch on the right hand side of the controls fascia, which will isolate the boiler. However, it is preferable to leave the electrical supply on whenever possible to permit operation of the built-in frost protection and daily pump and valve exercise.

To turn off the central heating use the room thermostat or programmer.

To turn off the domestic hot water turn the hot water temperature control knob to the minimum setting.

For holiday mode turn both of the temperature knobs to the minimum setting.

General description

The programmer is factory preset which switches the boiler on and off up to three times a day as shown below.

FACTORY PRESET TIMES		
1st	ON	6.30
1st	OFF	8.30
2nd	ON	12.00
2nd	OFF	12.00
3rd	ON	16.30
3rd	OFF	22.30

NOTE: The 2nd "ON" and "OFF" preset time will not bring the boiler on. In most cases this may not be required but can be programmed by the user if desired.

The programmer has an "advance" feature to manually switch the boiler "ON" or "OFF" and a holiday feature so that you can programme the boiler to start automatically when returning from holiday. Details on how to set these feature are given further on in these instructions.

Setting the Time

Make sure there is an electrical supply to the boiler and the boiler is switched "ON".

Place the slide switch to ◷

Press the "RESET" (**res**) button for a few seconds, using a pointed object such as a pencil. When released the display will begin to flash, **see diagram 2.** Using the **+** and **-** buttons, set the display to the correct time in twenty four hour format, for example, 1300 for 1pm, **see diagram 3.**

Helpful hint The **+** and **-** buttons are used to change the times. Press and release for small changes, hold the button down and the time will change quickly.

To use the internal, factory set, programmes place the slide switch to the 'RUN' position. The display will show the current time and the "ON" or "OFF" symbol will be displayed according to whether the programmer has switched the boiler on or off.

To Override or Advance the programmer

To advance the time clock operation, that is, switch the heating on when it is off or vice versa, press the "ON/OFF" button. The programmer will switch the heating on or off and the "ON" or "OFF" symbol will flash on the display to show that it has been overridden, **see diagram 4.**

Note: The boiler will stay "ON" or "OFF", as selected, until the programmer reaches its next on or off time. From then on, the programmer will switch the boiler on and off according to the internal programme.

When the boiler is again controlled by the internal programme the "ON" or "OFF" symbol will stop flashing. The operation of the programmer can be overridden in this way at any time.

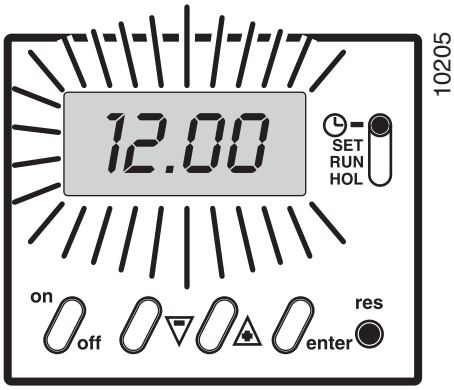

Diagram 2

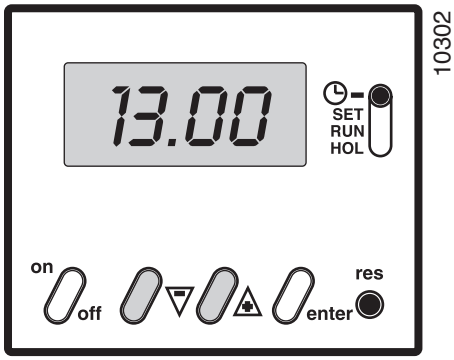

Diagram 3

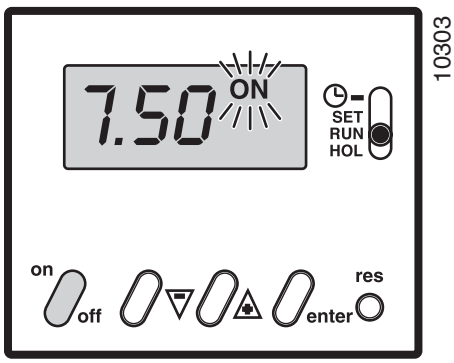

Diagram 4

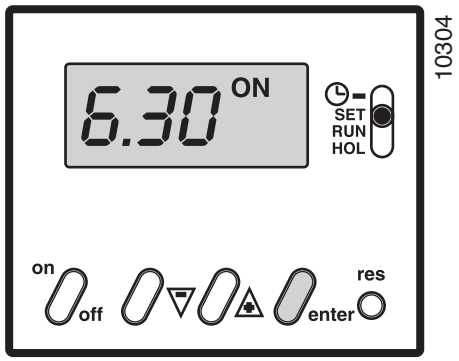

Diagram 5

To set the programmer ON and OFF times

Note: The programmer can be set to give a minimum of one and a maximum of three "ON" and "OFF" times.

Place the slide switch to "SET".

Press the "**enter**" button. The display will show the first "ON" time, **see diagram 5.**

Using the **+** and **-** buttons, change the first "ON" time to the time you require then press the "**enter**" button twice. This stores the new time and displays it to confirm it has been stored in the programmer memory.

Press the "**enter**" button again. The display will show the first "OFF" time, **see diagram 6.**

Using the **+** and **-** buttons, change the first "OFF" time to the time you require. Press the "**enter**" button twice. The display will show the first "ON" time.

Press the "**enter**" button again. The display will now show the first "OFF" time you have just entered.

Repeat the above for the remaining "ON" and "OFF" times.

When the "ON" and "OFF" times have been set, place the slide switch to "RUN".

Note: If all three "ON" and "OFF" times are not required, follow the above instructions but after setting the desired times, set the other times to show a series of dashes, using the **+** and **-** buttons, **see diagram 7.** The series of dashes are between times 23.59 and 0.00.

Helpful Hint If you get confused and wish to start again, press the "Reset" (**res**) button and the programmer will revert to the internal factory set programme. You can now reset the current time and start again.

To check the programme "ON" and "OFF" times

The programmed "ON" and "OFF" times can be checked at any time by moving the slide switch from "RUN" to "SET".

Successive presses of the "**enter**" button will show the "ON" and "OFF" times.

Always return the slide switch to "RUN" to return to normal timed working.

To set the 'Holiday' feature

The programmer has a holiday feature which can be set, if required, to keep the central heating "OFF" for a period between one hour and twenty seven days. This can be used, for example, to keep the central heating "OFF" during a holiday. After the programmed time has elapsed, the boiler will return to its normal programmes and switch on the boiler in time for a return from holiday.

Place the slide switch to " HOL " , the letter "**h**" will appear on the display, **see diagram 8.**

Using the **+** and **-** buttons, set the "Holiday" time required.

After the display has shown "twenty three hours", the "**h**" symbol on the display will change to a "**d**". The Holiday time will now be displayed in days, instead of hours, **see diagram 9.**

Use the "ON/OFF" button to set the boiler to the required operation during the "Holiday" period.

Place the slide switch to "RUN".

After the programmed "Holiday" time, the boiler will return to normal timed operation.

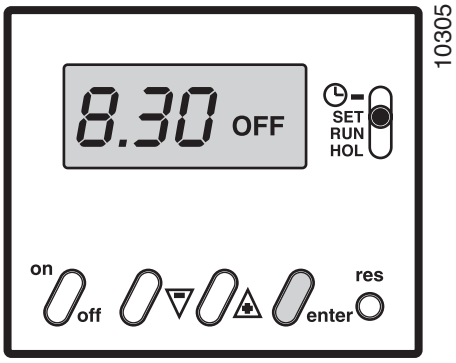

Diagram 6

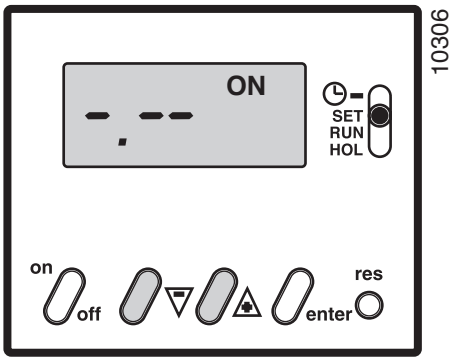

Diagram 7

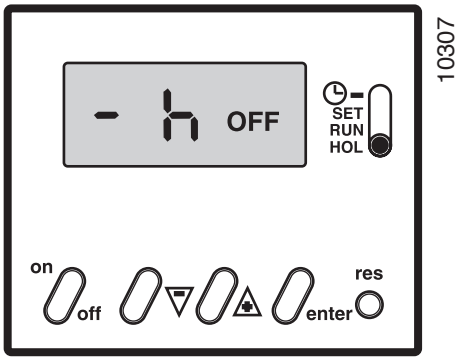

Diagram 8

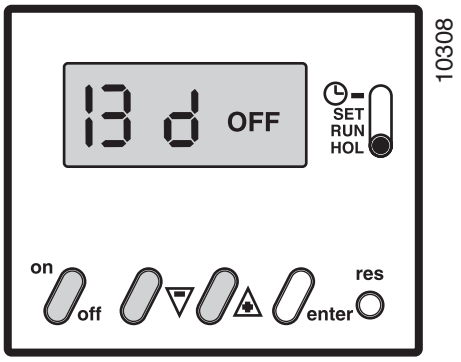

Diagram 9

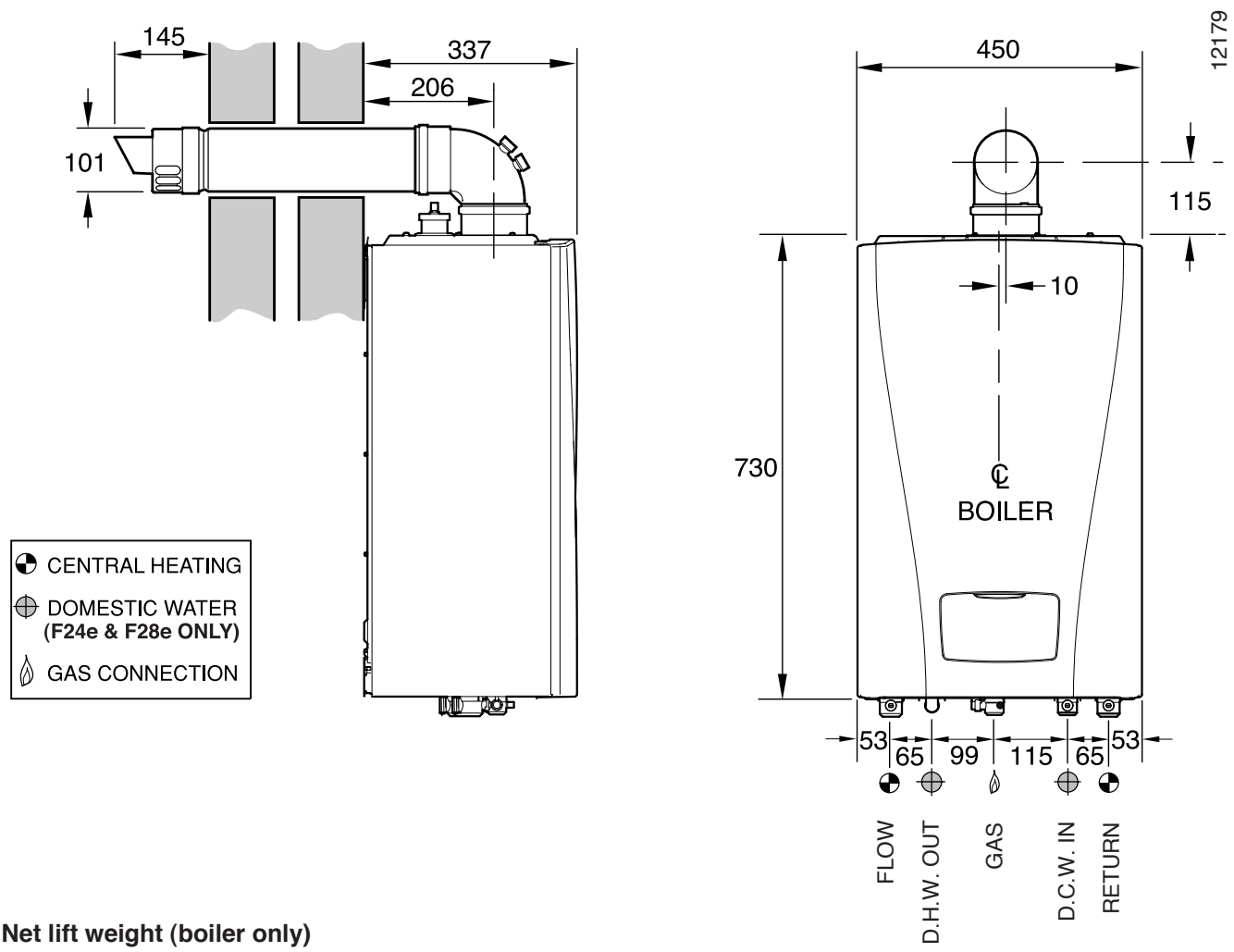

Net lift weight (boiler only)
(F24e 47 kg) (F28e 47 kg) (F28e SB 42 kg)

Gross lift weight (boiler and packaging)
(F24e 52 kg) (F28e 52 kg) (F28e SB 47 kg)

Diagram 1.1

The boiler and fittings pack are delivered in one carton.
The flue is supplied separately.

1 Technical Data

(F24e ONLY) Heating

Heat input (max) NET Q	25.6 kW
	87,347 BTU/H
Heat input (min) NET Q	5.0 kW
	17,060 BTU/H
Heat output (max) GROSS P	25.1 kW
	85,641 BTU/H
Heat output (min) GROSS P	4.9 kW
	16,719 BTU/H
Heat output (max) Condensing Mode	26.5 kW
	90,418 BTU/H
Efficiency - Sedbuk A	90.3%
Maximum heating temperature	87° C
Expansion vessel effective capacity	8 l
Expansion vessel charge pressure	0.5 bar
Maximum system capacity at 75°C	110 l
Safety valve,	maximum service pressure 3 bar

(F28e ONLY) Heating

Heat input (max) NET Q	29.6 kW
	100,995 BTU/H
Heat input (min) NET Q	5.9 kW
	20,130 BTU/H
Heat output (max) GROSS P	29.0 kW
	98,948 BTU/H
Heat output (min) GROSS P	5.8 kW
	19,789 BTU/H
Heat output (max) Condensing Mode	31.2 kW
	106,454 BTU/H
Efficiency - Sedbuk A	90.3%
Maximum heating temperature	87° C
Expansion vessel effective capacity	8 l
Expansion vessel charge pressure	0.5 bar
Maximum system capacity at 75°C	110 l
Safety valve,	maximum service pressure 3 bar

(F24e ONLY) Hot water

Heat input (max) NET Q	25.6 kW
	87,347 BTU/H
Heat input (min) NET Q	5.0 kW
	17,060 BTU/H
Heat output (max) GROSS P	25.1 kW
	85,641 BTU/H
Heat output (min) GROSS P	4.9 kW
	16,719 BTU/H
Maximum hot water temperature	63° C
Minimum hot water temperature	38° C
Specific flow rate (for 35° C temp rise)	10 l/min.
Threshold flow rate	1.5 l/min.
Maximum supply pressure	10 bar
Minimum supply pressure	1 bar

(F28e ONLY) Hot water

Heat input (max) NET Q	29.6 kW
	100,995 BTU/H
Heat input (min) NET Q	5.9 kW
	20,130 BTU/H
Heat output (max) GROSS P	29.0 kW
	98,948 BTU/H
Heat output (min) GROSS P	5.8 kW
	19,789 BTU/H
Maximum hot water temperature	63° C
Minimum hot water temperature	38° C
Specific flow rate (for 35° C temp rise)	12 l/min.
Threshold flow rate	1.5 l/min.
Maximum supply pressure	10 bar
Minimum supply pressure	1 bar

Combustion

Products outlet diameter	60 mm
Fresh air inlet diameter	100 mm
Combustion products values	CO (40ppm)
at Max.	CO_2 (9.4%)
	NOx class 5 (3.5ppm)

Electrical

Electrical supply	230 V ~ 50Hz
Electrical rating	180 W fused at 3A
Level of protection	IPX4D
Internal Fuse rating	125mAT on PCB
	3.15AT on Fan Supply

Natural Gas (G20)

Inlet pressure	20 mbar
CO_2 on Max Open	9.2%
CO_2 on Low Open	8.3%
Gas rate maximum	3.1 m^3/h
Gas rate minimum	0.6 m^3/h

2 Technical Information

IMPORTANT NOTICE

Where no British Standards exists, materials and equipment should be fit for their purpose and of suitable quality and workmanship.

The installation of this boiler must be carried out by a **competent person** in accordance the rules in force in the countries of destination.

Manufacturer's instructions must not be taken as overriding statutory requirements.

1.2 Statutory Requirements

In GB the installation of the boiler must be carried out by a competent person as described in the following regulations:

The manufacturer's instructions supplied.

The Gas Safety (Installation and Use) Regulations.

The appropriate Buildings Regulations either The Building Regulations, The Building Regulations (Scotland), The Building Regulations (Northern Ireland).

The Water Fittings Regulations or Water byelaws in Scotland.

The Health and Safety at Work Act, Control of Substances Hazardous to Health (COSHH).

The Current I.E.E. Wiring Regulations.

Where no specific instructions are given, reference should be made to the relevant British Standard Code of Practice.

In IE, the installation must be carried out by a **competent person** and installed in accordance with the current edition of I.S.813 "Domestic Gas Installations", the current Building Regulations and reference should be made to the current ETCI rules for Electrical Installation.

In GB the following Codes of Practice apply:

BS4814, BS6798, BS5440 Part 1 and 2, BS5546 Part 1, BS5449, BS6891, BS6700, BS7074 Part 1 and 2, BS7593, BS7671.

In IE: I.S.813, BS5546, BS 5449, BS 7074, BS 7593.

Manufacturer's instructions must not be taken as overriding statutory requirements.

Note: For further information, see the current issue of the Building Regulations, approved document L1 (in the UK) and the references:

1) GIL 59, 2000: Central heating system specification (CheSS) and

2) GPG 302, 2001: Controls for domestic central heating system and hot water. BRECSU.

Certification

This boiler certificated to the current issue of EN 483 : 2000 for performance and safety.

It is important that no alteration is made to the boiler, without permission, in writing, from Saunier Duval.

Any alteration that is not approved by Saunier Duval, could invalidate the warranty and could also infringe the current issue of the Statutory Requirements.

3 Heating System Design

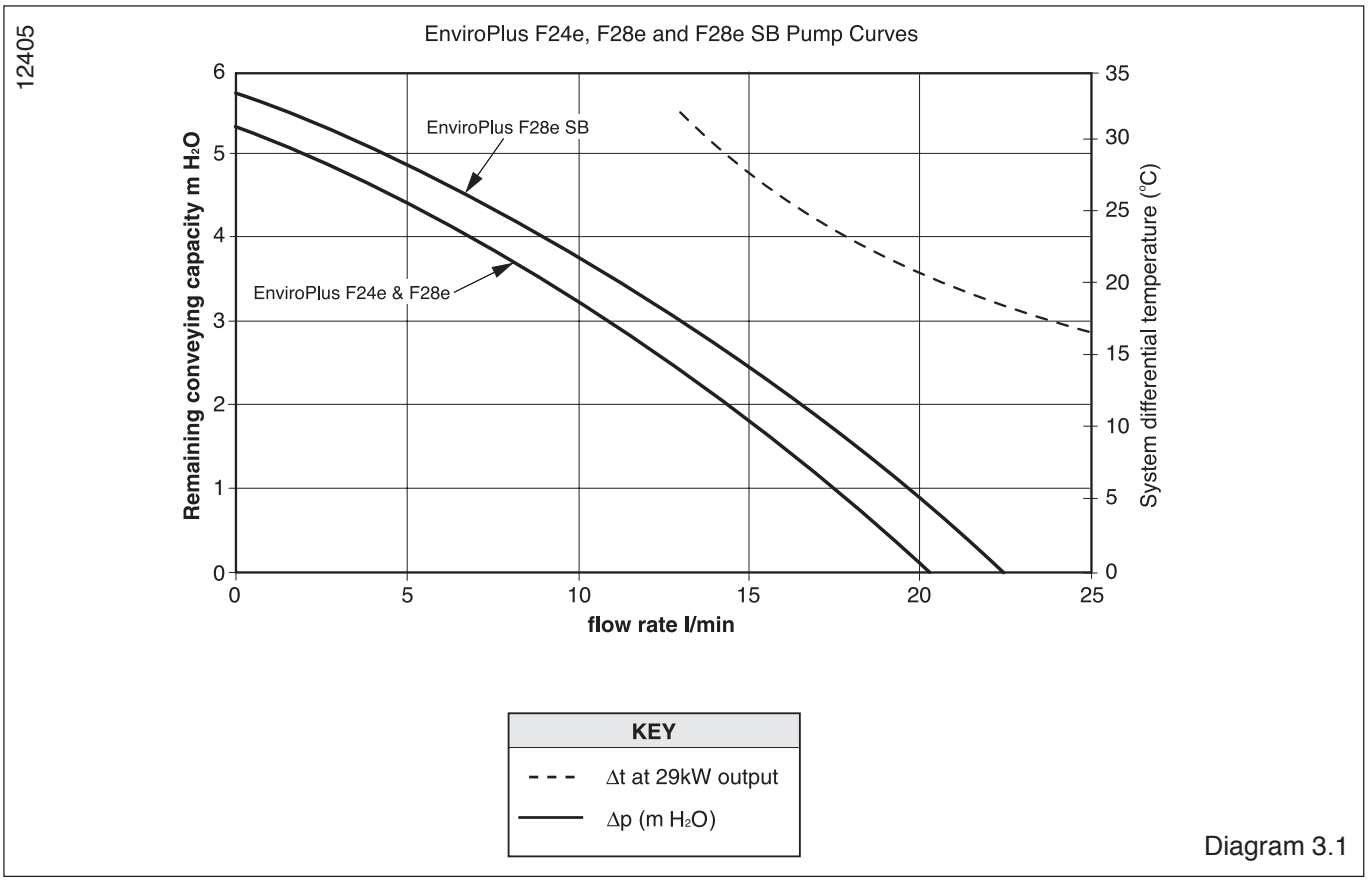

Diagram 3.1

- The **EnviroPlus F24e, F28e and F28e SB** are for use with sealed central heating systems.

- The safety valves are an integral part of the boiler and cannot be adjusted.

- The circulation pump is integral with the boiler.

- Pipe sectional areas shall be determined in accordance with normal practices, using the output/pressure curve**, see diagram 3.1.** The distribution system shall be calculated in accordance with the output requirements of the actual system, not the maximum output of the boiler. However, provision shall be made to ensure sufficient flow so that the temperature difference between the flow and return pipes be less than or equal to 20°C. The minimum flow is 1249 l/h this equates to a system temperature differential of 20°C.

The system can be fitted with a lockable balancing valve if necessary in the main flow or return pipes shown as **valve 'A' in (F24e & F28e ONLY diagram 3.2) or (F28e SB ONLY diagram 3.2a).**

- The piping system shall be routed so as to avoid any air pockets and facilitate permanent venting of the installation. Bleed fittings must be provided at every high point of the system and on all radiators.

- The total volume of water permitted for the heating system depends, amongst other things, on the static head in the cold condition. The expansion vessel on the boiler is pressurised at 0.5 bar and allows a maximum system volume of 110 litres for an average temperature of 75°C and a maximum service pressure of 3 bar. This pressure setting can be modified at commissioning stage if the static head differs. An additional expansion vessel can be fitted to the system if required, **see diagram 3.2.**

- Provision shall be made for a drain valve at the lowest point of the system. A drain for the appliance is provided as an integral part of the boiler positioned at the rear bottom of the boiler, **see diagram 9.2.**

The installation of the boiler must comply with the requirements of the current issue of BS6798, in Ireland, refer also to the current edition of I.S.813 "Domestic Gas Installations".

In GB it is necessary to comply with the Water Supply (Water Fittings) Regulations 1999 (for Scotland, the Water Byelaws 2000, Scotland).

To comply with the Water regulations your attention is drawn to: The Water Regulations guide published by the Water Regulations Advisory Service (WRAS) gives full details of the requirements.

In IE the requirements given in the current edition of I.S.813 "Domestic Gas Installations" and the current Building Regulations must be followed.

3.1 Bypass

NOTE: All systems must have at least one radiator not fitted with a thermostatic valve.

The boiler is fitted with a fixed bypass. Ensure that the flow rate does not drop below the figure specified, **see diagram 3.1.**

A bypass is not required on the central heating circuit unless the system controls could allow the boiler to operate when there is no flow.

Where an additional bypass is fitted, it must be placed at least 1.5 metres from the appliance, **see diagram 3.2.**

3.2 Filling the Sealed System

NOTE: The water pressure at the boiler must be at least 1.2bar to enable filling the boiler to a minimum pressure. If not pressurisation must be carried out by an alternative filling loop.

The boiler has a built in filling device, **see diagram 3.3**. A push-on extension is supplied in the loose items pack to ease access to the filling device tap.

This filling device is designed to enable the re-pressurisation of the system in the event of loss of pressure. It is not intended to be used to completely fill the system. If so used, it may take a long time to fill the system.

Refer to diagram 3.3. Using the tap extensions connected to tap (a) and tap (b) open tap (b) and then slowly open tap (a). Re-pressurise the system to a pressure of 1.0 bar indicated on the digital display with no demand. When the system is pressurised **you must** close tap (b) and then tap (a).

To fill the system quickly provision should be made to include a proprietry filling loop external to the boiler.

Suitable external filling systems are shown diagramatically, **see diagram 3.4**. The system should be pressurized to 1 bar, indicated on the digital display with no heating demand.

3.3 Water Treatment

In the case of an existing installation, it is **ESSENTIAL** that prior to installing the new boiler the system is thoroughly flushed. For optimum performance after installation of a new system, the boiler and its associated central heating system should also be flushed. Flushing should be carried out in accordance with BS7593: 1992 using a cleanser such as Sentinel X300 or X400, or Fernox Superfloc.

For long-term corrosion protection, after flushing, an inhibitor suitable for cast aluminium exchangers should be used, refer to the current issue of BS 5449 and BS 7593 on the use of inhibitors in central heating systems.

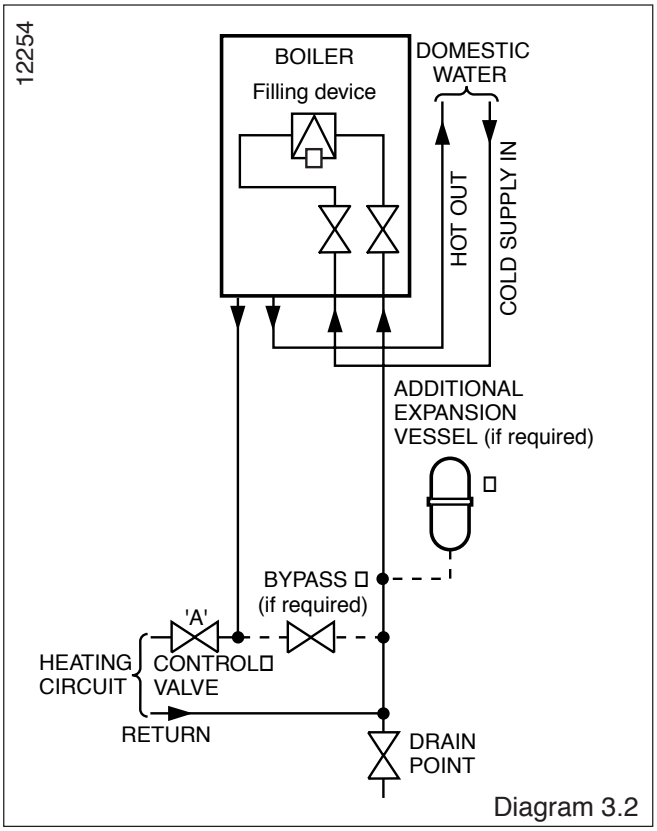

Diagram 3.2

3 Heating System Design

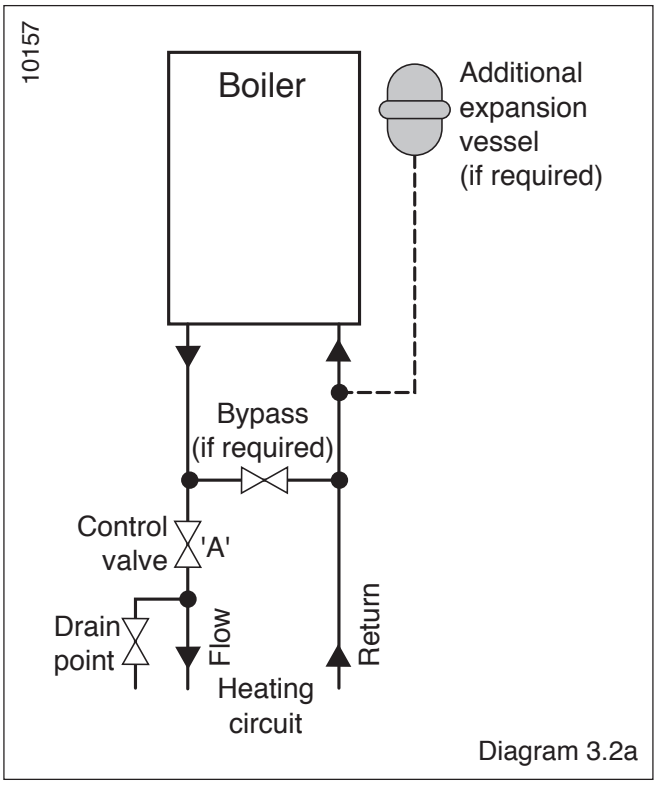

Diagram 3.2a

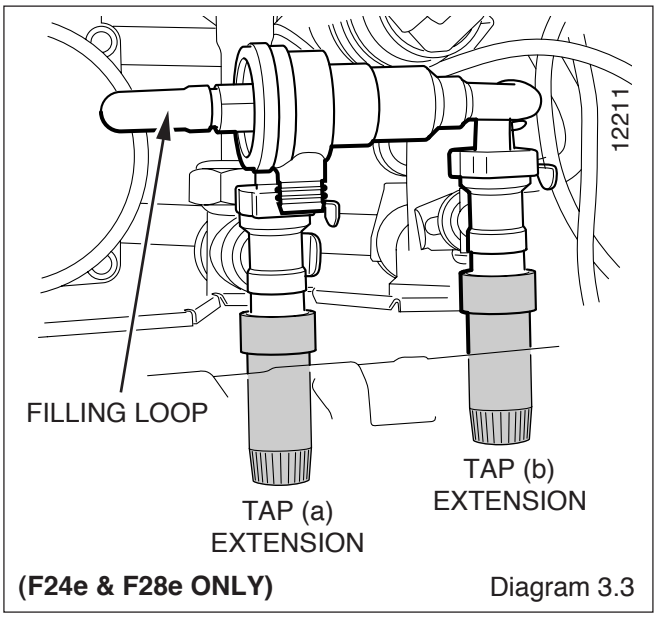

(F24e & F28e ONLY) Diagram 3.3

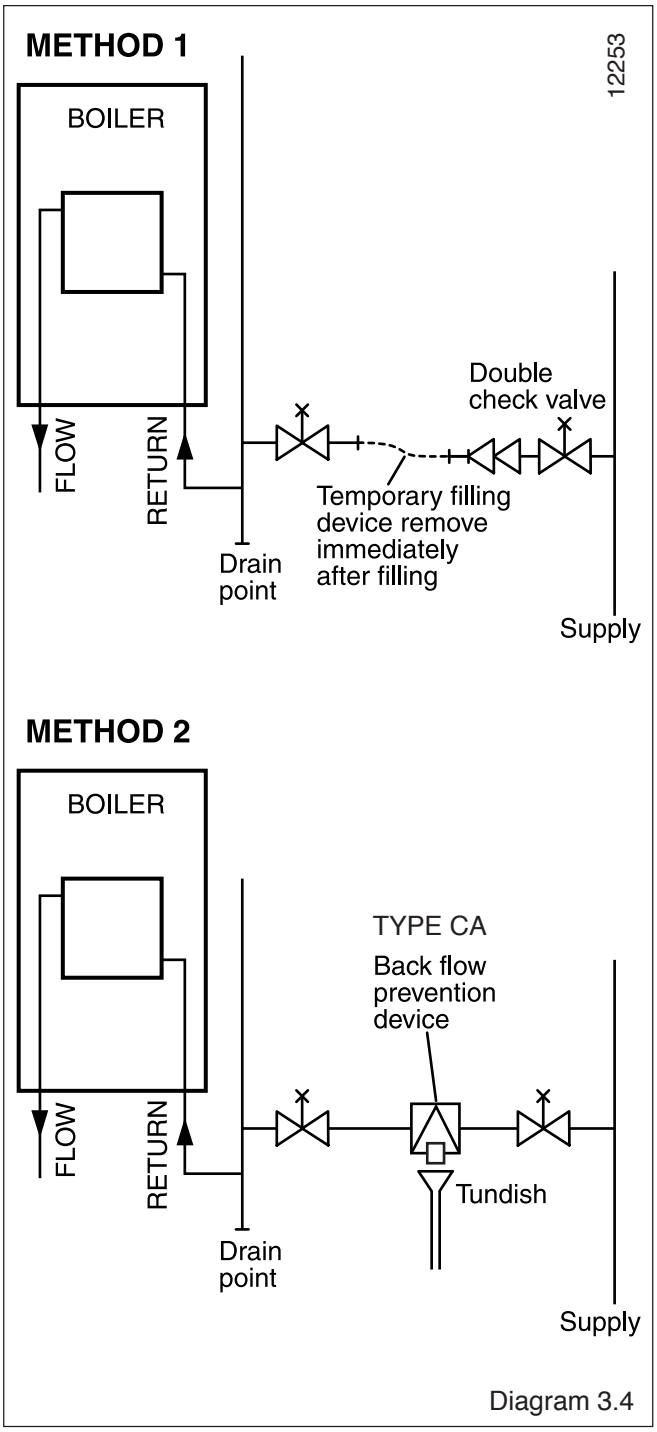

Diagram 3.4

4 (F24e & F28e ONLY) Domestic Hot Water System Design

All domestic hot water circuits, connections, fittings must be in accordance with the relevant standards and water supply regulations.

For GB: Refer to the current addition of the Water Regulations Guide.

For IE: The current edition of I.S.813 "Domestic Gas Installations".

- Copper tubing or plastic Hep_20 may be used for the domestic hot water system. Unnecessary pressure losses should be avoided.

- Provision shall be made for a drain valve at the lowest point of the system.

- The boiler will operate with a supply pressure of 0,6 bar, but under reduced flow rate. In these circumstances the filling loop will not pressurise the boiler.

Best operating comfort will be obtained from a supply pressure of 1 bar.

4.1 Hard Water Areas

In areas where the water is 'hard', more than 200mg/litre, it is recommended that a proprietary scale reducer is fitted in the cold water supply to the boiler.

5 Boiler Schematic

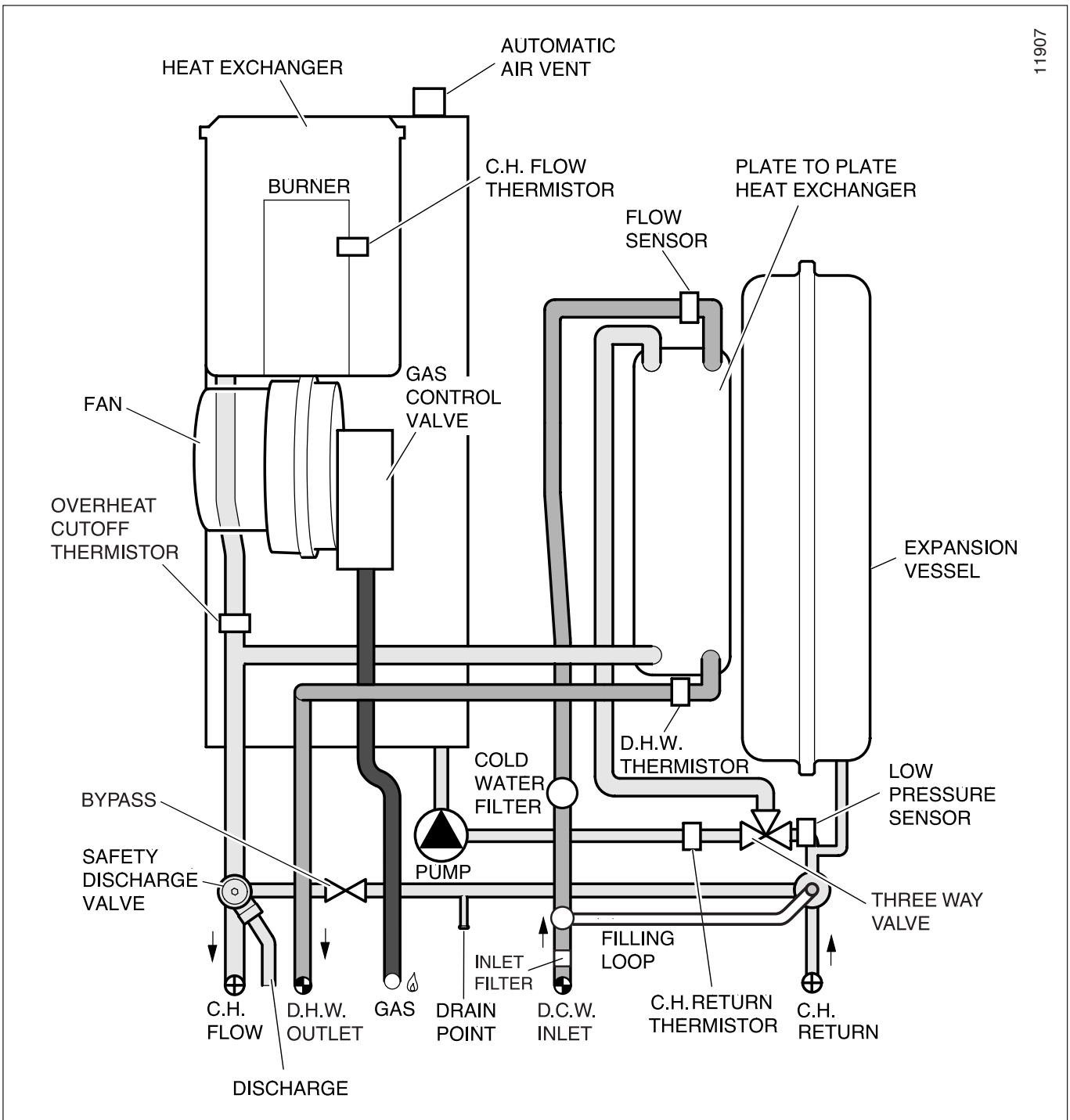

(F24e & F28e ONLY)

Diagram 5.1

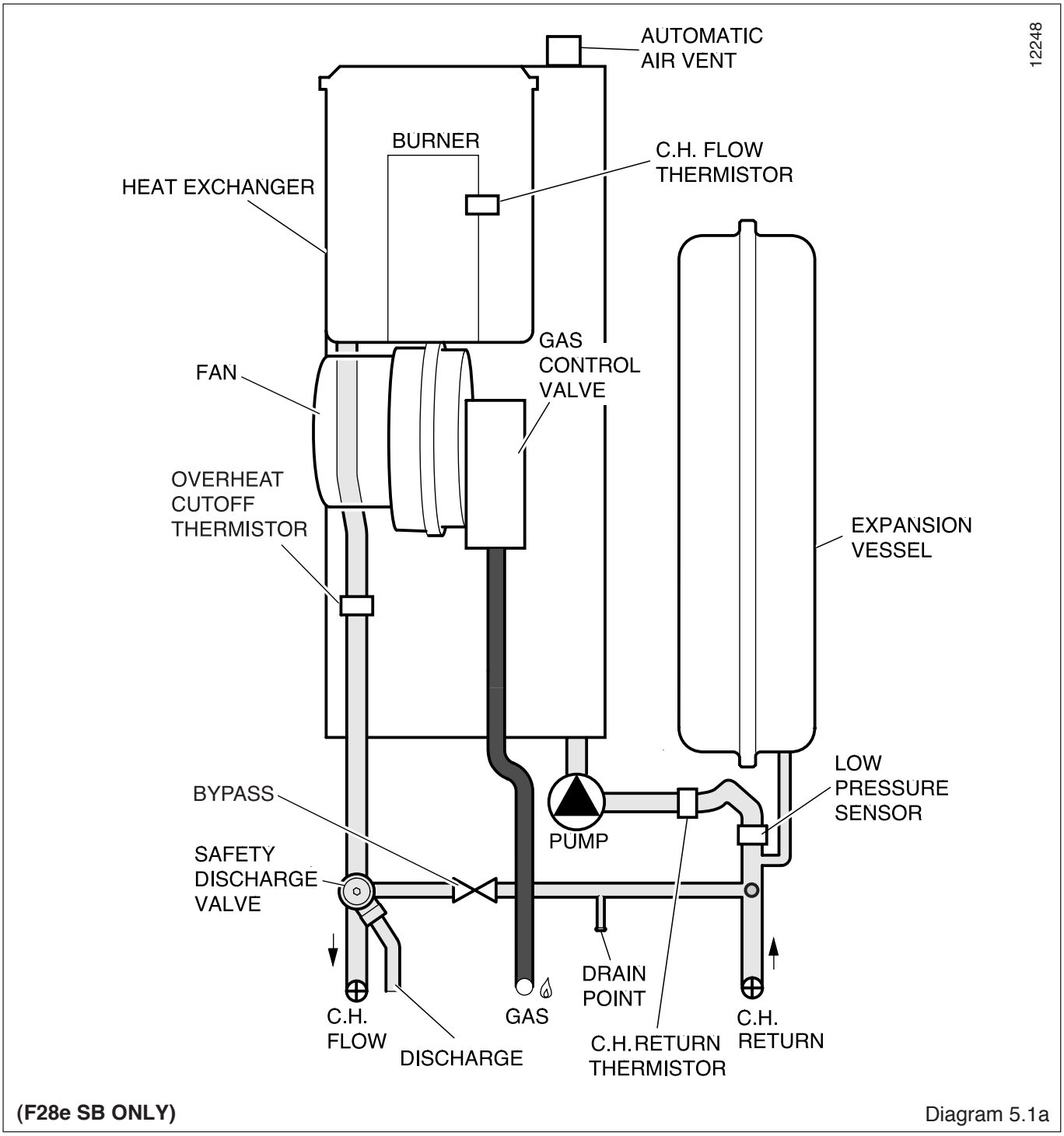

(F28e SB ONLY)

Diagram 5.1a

6.1 Location

This boiler is not suitable for outdoor installation.

This boiler may be installed in any room, although particular attention is drawn to the installation of a boiler in a room containing a bath or shower where reference must be made to the relevant requirements.

The boiler must **NOT** be installed in a cupboard.

In GB this is the current I.E.E. WIRING REGULATIONS and BUILDING REGULATIONS.

In IE reference should be made to the current edition of I.S.813 "Domestic Gas Installations" and the current ETCI rules.

The boiler must be mounted on a flat wall, which is sufficiently robust to take its weight, **see diagram 1.1**.

6.2 Clearances

The position of the boiler must be such that there is adequate space for servicing.

The recommended clearances are shown in **diagram 6.1.**

The minimum acceptable spacings from the terminal to obstructions and ventilation openings are shown in **diagram 6.2.** For Ireland the minimum distances for flue terminal positioning must be those detailed in I.S.813 "Domestic Gas Installations".

The terminal must be exposed to the external air, allowing free passage of air across it at all times.

Being a condensing boiler some pluming may occur from the flue outlet. This should be taken into consideration when selecting the position for the terminal.

Carports or similar extensions of a roof only, or a roof and one wall, require special consideration with respect to any openings, doors, vents or windows under the roof. Care is required to protect the roof if made of plastic sheeting. If the carport comprises of a roof and two or more walls, seek advice from the local gas supply company before installing the boiler.

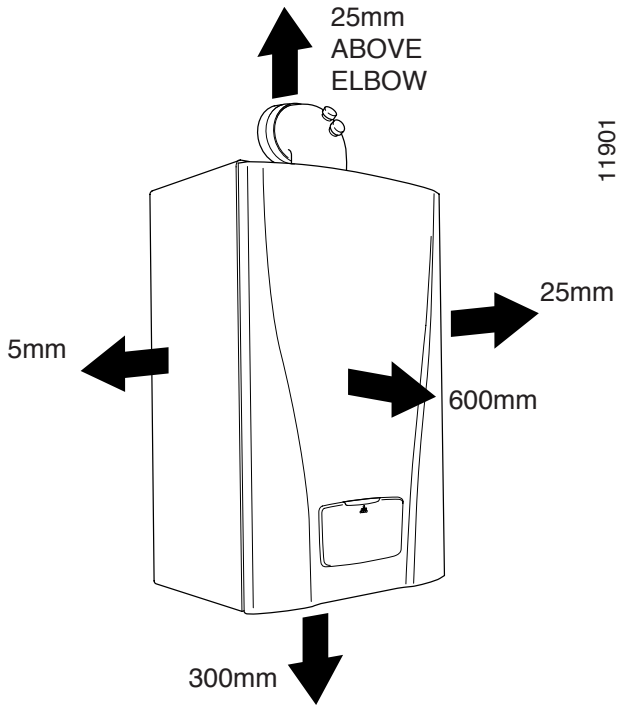

Diagram 6.1

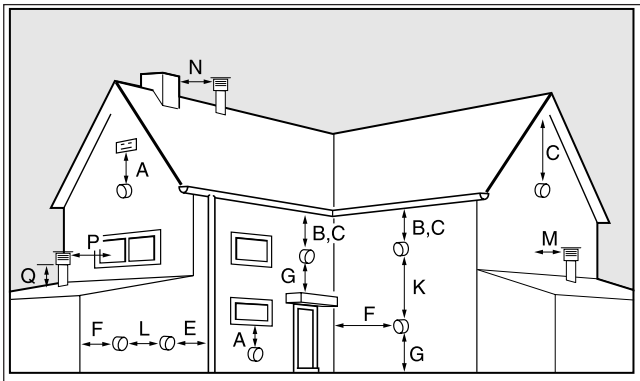

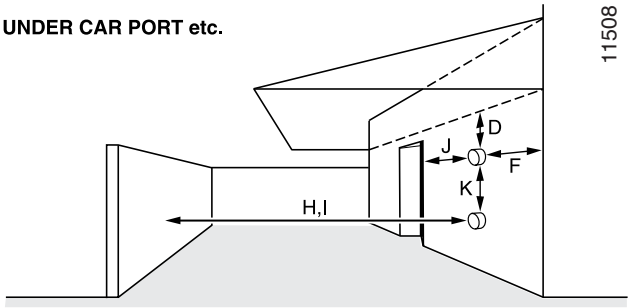

MINIMUM SITING DIMENSIONS FOR THE POSITIONING OF FLUE TERMINALS		MM
HORIZONTAL FLUES		
A	DIRECTLY BELOW, ABOVE OR HORIZONTALLY TO AN OPENING, AIR BRICK, OPENING WINDOWS, AIR VENT, OR ANY OTHER VENTILATION OPENING	300
B	BELOW GUTTER, DRAIN/SOIL PIPE	75
C	BELOW EAVES	200
D	BELOW A BALCONY OR CAR PORT	200
E	FROM VERTICAL DRAIN PIPES AND SOIL PIPES	150
F	FROM INTERNAL/EXTERNAL CORNERS OR TO A BOUNDARY ALONGSIDE THE TERMINAL	300
G	ABOVE ADJACENT GROUND OR BALCONY LEVEL	300
H	FROM SURFACE OR A BOUNDARY FACING THE TERMINAL	600
I	FACING TERMINALS	1200
J	FROM OPENING (DOOR/WINDOW) IN CAR PORT INTO DWELLING	1200
K	VERTICAL FROM A TERMINAL	1500
L	HORIZONTALLY FROM A TERMINAL	300
VERTICAL FLUES		
M	FROM ADJACENT WALL TO FLUE	300
N	FROM ANOTHER TERMINAL	600
P	FROM ADJACENT OPENING WINDOW	1000
Q	ABOVE ROOF LEVEL	300

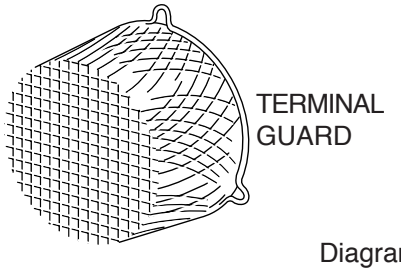

Diagram 6.2

6.3 Terminal guard

A terminal guard is required if persons could come into contact with the terminal or the terminal could be subject to damage.

If a terminal guard is required, it must be positioned to provide a minimum of 50mm clearance from any part of the terminal and to be central over the terminal.

A suitable terminal guard type K3, **see diagram 6.2** can be supplied by:

Tower flue components Ltd.
Morley road, Tonbridge, Kent, TN9 1RA.

6.4 Flue options

There are various flue systems to choose from as follows:

Horizontal top flue,	Flue Extension, 90°
Vertical flue.	Flue Extensions 45° and 90°
Twin flue.	Flue Extensions 45° and 90°

For detailed information refer to flue options guide. This is available from your nearest stockist.

6.5 Timber Frame Buildings

If the boiler is to be installed in a timber frame building it should be fitted in accordance with the Institute of Gas Engineers document IGE/UP/7/1998. If in doubt seek advice from the local gas undertaking or Saunier Duval.

6.6 Room Ventilation

The boiler is room sealed, so when it is installed in a room or space, a permanent air vent is not required.

7 Installation Preparation and Appliance Fixing

7.1 Unpacking of Boiler

IMPORTANT: With regards to the Manual Handling Operations, 1992 Regulations, the following lift operation exceeds the recommended weight for a one man lift.

Stand the boiler carton upright.

Cut and remove the securing straps and lift off the carton sleeve. Place aside any loose components until required.

Carefully lay the boiler on its back, remove the two front casing panel securing screws and lift off the panel from two retaining lugs, **see diagram 7.1**.

7.2 Wall Template

Remove the wall template from the installation pack and place in the desired position on a flat wall, giving due consideration to boiler clearances, **see section 6**.

7.3 Horizontal Flue Hole Cutting

Mark the centre of the flue hole and remove the wall template.

The **standard horizontal flue** is designed with an internal fall of 35mm/metre towards the boiler for disposal of condensate. If the standard flue length alone is being used then the flue hole of diameter 105mm can be cut in the position marked on the wall template.

For **standard side flues** the horizontal flue centre line on the wall template should be extended to the side wall, and the vertical centre of the flue hole marked at 206mm from the back wall.

For installations with external access, a 105mm diameter core drill can be used.

For installations with internal access only a 125mm diameter core drill should be used.

When using extension pipes with the horizontal rear flue, a core drill size of 125mm should be used to allow the extension pieces to slope at 35mm/metre (2.5°) towards the boiler.

For **extended side flues**, the flue hole centre should be determined by extending the dashed inclined line on the template to the side wall. This dashed line is drawn at 35mm/metre (2.5°) rise from the boiler. Where this line reaches the side wall, a horizontal line should be marked. The vertical centre line of the flue should then be marked at 206mm from the back wall, **see diagram 7.2.**

To allow for the flue passing through the wall at this angle a 125mm hole should be drilled irrespective of internal or external installation.

7.4 Appliance Fixing

Reposition the wall template mark the position of the hanging bracket fixing holes. Drill the fixing holes and insert suitable wall plugs. Fix the hanging bracket to the wall using suitable screws, **see diagram 7.2.**

Lift the boiler into position in the following manner.

Lean the top of the boiler slightly to the wall and position just above the hanging bracket. Allow the boiler to slowly move downwards until engaged in the hanging bracket.

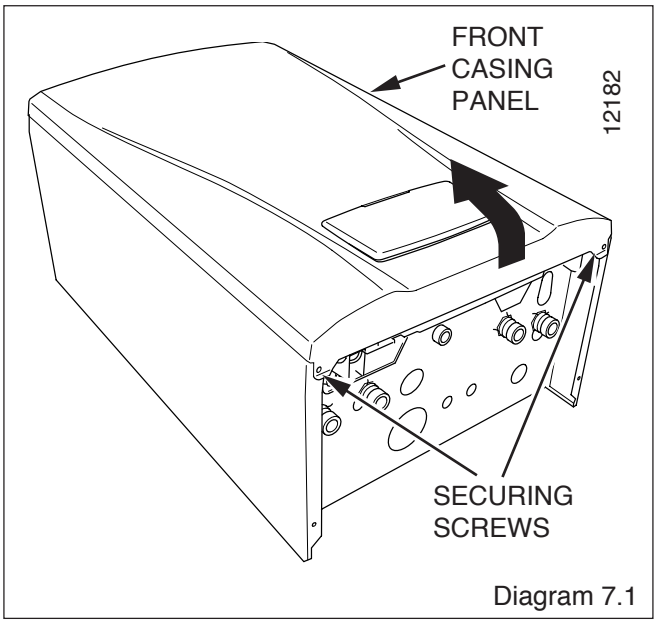

Diagram 7.1

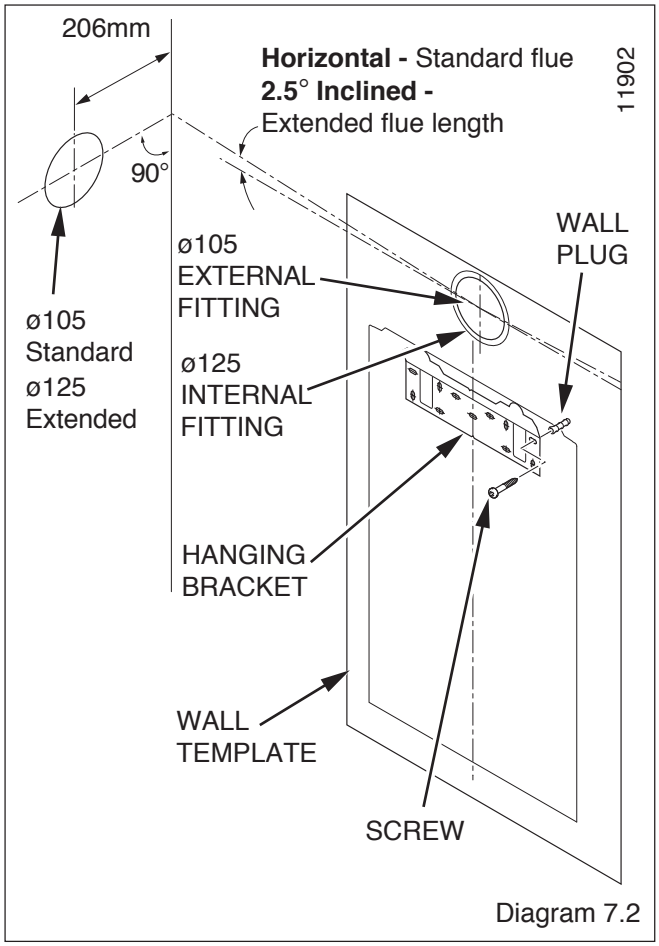

Diagram 7.2

8 Horizontal Top Flue Preparation and Fitting

The standard horizontal flue is fitted onto the top of the boiler using the flue adaptor.

See diagrams 8.1 to 8.3 to determine whether a standard flue can be used.

The standard flue can be extended using 1m long extension kits and 90° elbows to maximum equivalent length of 3.5m - Note: A 90° elbow equals 1m of flue.

When extension pipes are used the flue system must be designed to have a continuous fall to the boiler of at least 2.5° to allow condensate to run back into the boiler and out via the drain.

Horizontal Internal Flue Installation The flue can be installed from inside the building, when access to the outside wall face is not practicable.

8.1 Flue Length

All dimensions are in mm.

For a rear flue, measure the distance from the outside wall face to the boiler mounting wall. Check that the flue length will be suitable, **see diagram 8.1** for a standard flue system.

For a side flue, measure the distance from the outside wall face to the flue outlet centre line of the boiler. Check that the flue length will be suitable, **see diagram 8.2** for a left hand flue system or **diagram 8.3** for a right hand flue system.

If the measurement exceeds those shown in **diagrams 8.1 - 8.3** then one or more extension pipes are required.

WALL THICKNESS 'X' = 75 TO 527mm

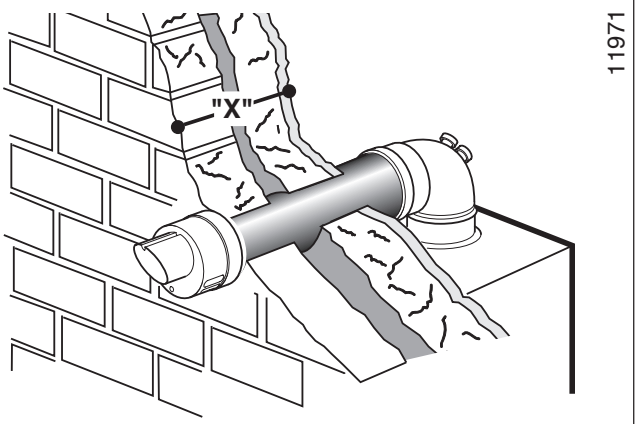

REAR FLUE - STANDARD Diagram 8.1

DISTANCE 'Y' = 330 TO 732mm

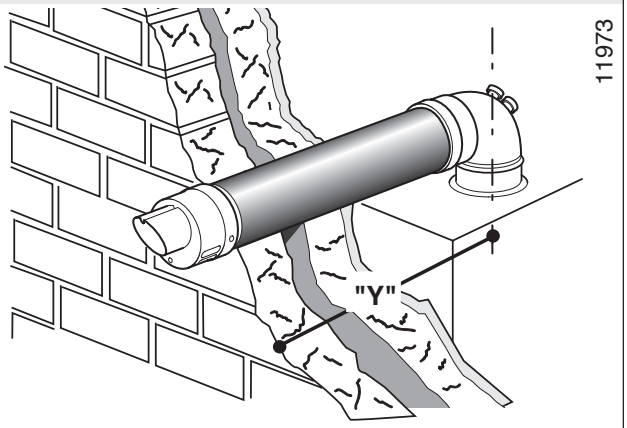

SIDE FLUE - STANDARD Left Diagram 8.2

DISTANCE 'Y' = 310 TO 732mm

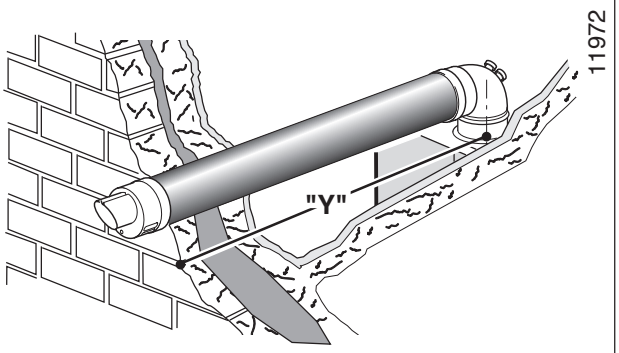

SIDE FLUE - STANDARD Right Diagram 8.3

8.2 Rear Flue

Mark the air duct assembly and the flue duct at the lengths shown in **diagram 8.4.**

Then cut to length, cutting square and removing any burrs.

8.3 Standard Side Flue

Fit the flue spigot 'H', supplied with the boiler with the three securing screws to the top of the boiler. Fit the flue elbow 'G' to the flue spigot a small amount of lubricant should be applied to the seal before fitting the flue elbow, **see the relevant part of diagram 8.6.**

Measure from the outside wall face to the flue elbow 'Y' add 45mm. Measure and mark the flue to length. Make sure that the flue duct groove is engaged on air duct tab and is pushed fully into the air duct. When fully engaged the measurment at the end of the terminal will be 65mm. Then cut, cutting square and removing any burrs, **see diagram 8.5.**

8.4 Side Flue With Extensions

Fit the flue spigot 'H', supplied with the boiler with the three securing screws to the top of the boiler. Fit the flue elbow 'G' to the flue spigot a small amount of lubricant should be applied to the seal before fitting the flue elbow, **see the relevant part of diagram 8.6.**

Measure from the outside wall face to the flue elbow 'Y' add 45mm. Measure and mark the flue to length. Make sure that the flue duct groove is engaged on air duct tab and is pushed fully into the air duct. When fully engaged the measurment at the end of the terminal will be 65mm. Then cut, cutting square and removing any burrs, **see diagram 8.5.**

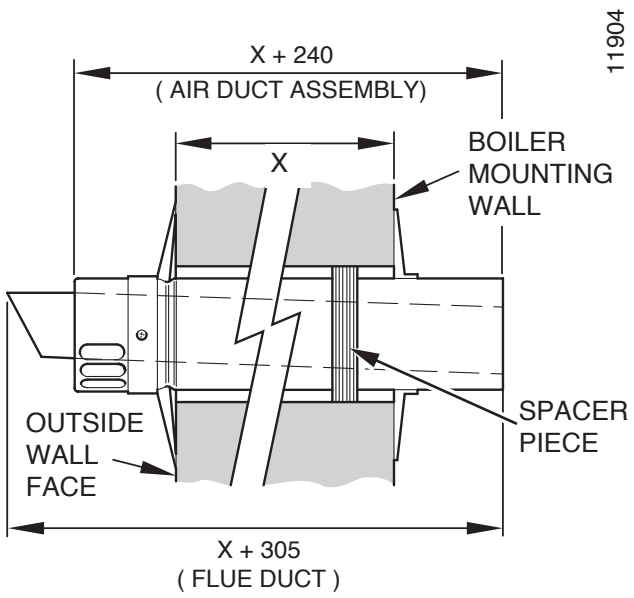

REAR FLUE Diagram 8.4

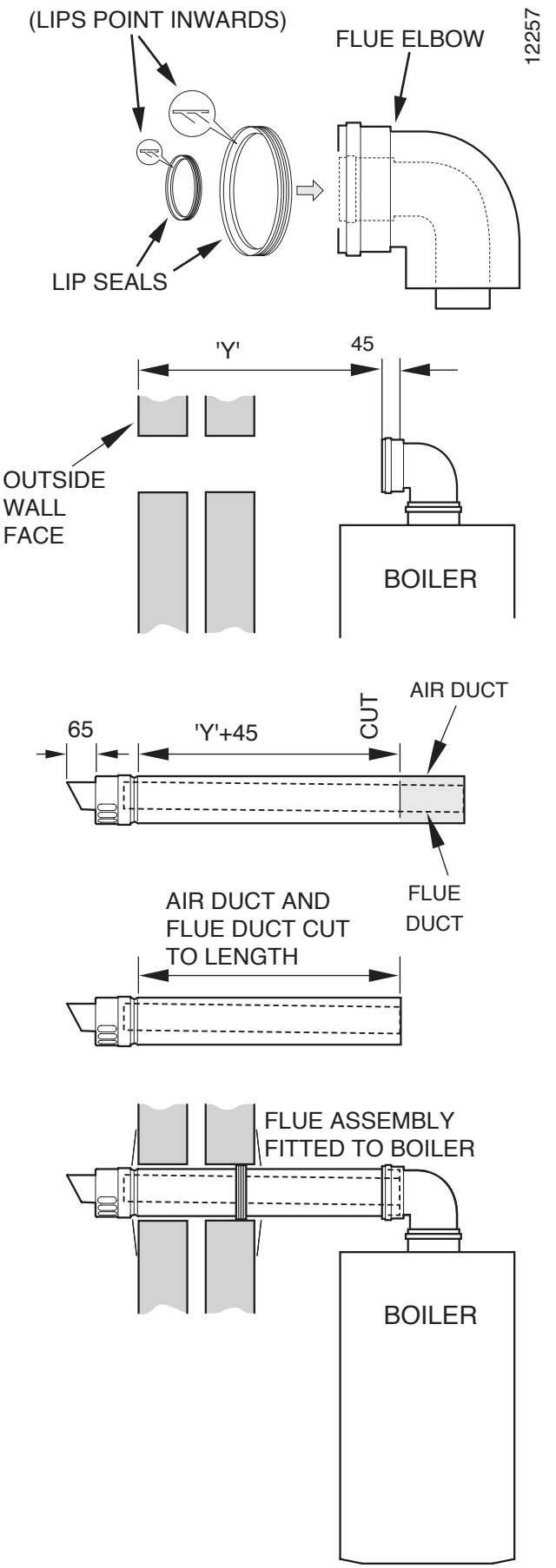

SIDE DUCT - STANDARD / EXTENDED FLUE

Diagram 8.5

8.5 Flue Assembly

The flue assembly is an entirely push fit design.

The lip seals should be fitted in the correct orientation into the flue elbow, **see diagram 8.4.**

Lubricate the lip seals prior to inserting flue pipes.

Make sure all joints are properly fitted, sealed and secured.

Remove all burrs from cut pipes.

Diagram 8.5 shows the components supplied in the standard flue kit.

Having cut the air and flue ducts as described in **sections 8.1 - 8.4**, assemble the flue as follows: the flue can be assembled externally and internally by following sections A and C, or entirely from inside by following sections B and C.

NOTE: Ensure that the 'up' label on air pipe 'B' is at the top, i.e. the tab protruding into the hole at the outer end of the pipe is uppermost. For internal fitting it may be necessary to mark the flue protruding internally 'top', to ensure the flue does not twist on fitting.

A. Internal fitting - Fit the rubber sealing collar 'D' into the groove at the outer end of the air pipe 'B'.

Fit spacer piece 'E' over air pipe 'B', ensure correct orientation, **see diagram 8.5.**

Push the air pipe 'B' through the wall until collar 'D' is clear of the outside face of the wall.

Pull the air pipe 'B' back to ensure that collar 'D' is pulled up to the outside wall face.

Ensure spacer piece 'E' is pushed into the wall, **see diagram 8.4.**

Fit sealing flange 'F' over the air pipe but not against the inside wall face.

B. External fitting - Fit the rubber sealing collar 'D' into the groove at the outer end of the air pipe 'B'.

Push the air pipe 'B' into the wall until collar 'D' is pushed up against the outside face of the wall.

Fit sealing flange 'F' over the air pipe and against the inside wall face.

C. Fitting Completion - Ensure flue pipe 'A' is fully inserted into the air pipe 'B' ensuring that the groove on the outer end engages in the air pipe tab.

Ensure flue pipe spacer 'C' is correctly located between 'A' and 'B'.

Attach any extension pieces as necessary.

8.6 Flue Attachment to Boiler, refer to Diagram 8.6.

Internal rear flue fitting. While the flue spigot 'H' is attached to the boiler, push the flue elbow 'G' into the adaptor. Pull air pipe 'B' and flue duct 'A' into the flue elbow. A small amount of lubricant should be applied to the rubber seals in the elbow to facilitate this.

Push rubber sealing collar 'F' along flue against inside wall face.

External and Side flue fitting. Remove flue spigot 'H' from the boiler and fit 'H' to the flue elbow 'G' and fit flue elbow 'G' to air pipe 'B' and flue duct 'A'. A small amount of lubricant should be applied to the rubber seals in the elbow to facilitate this.

Secure the flue spigot 'H' to the top of the boiler with the 3 screws provided.

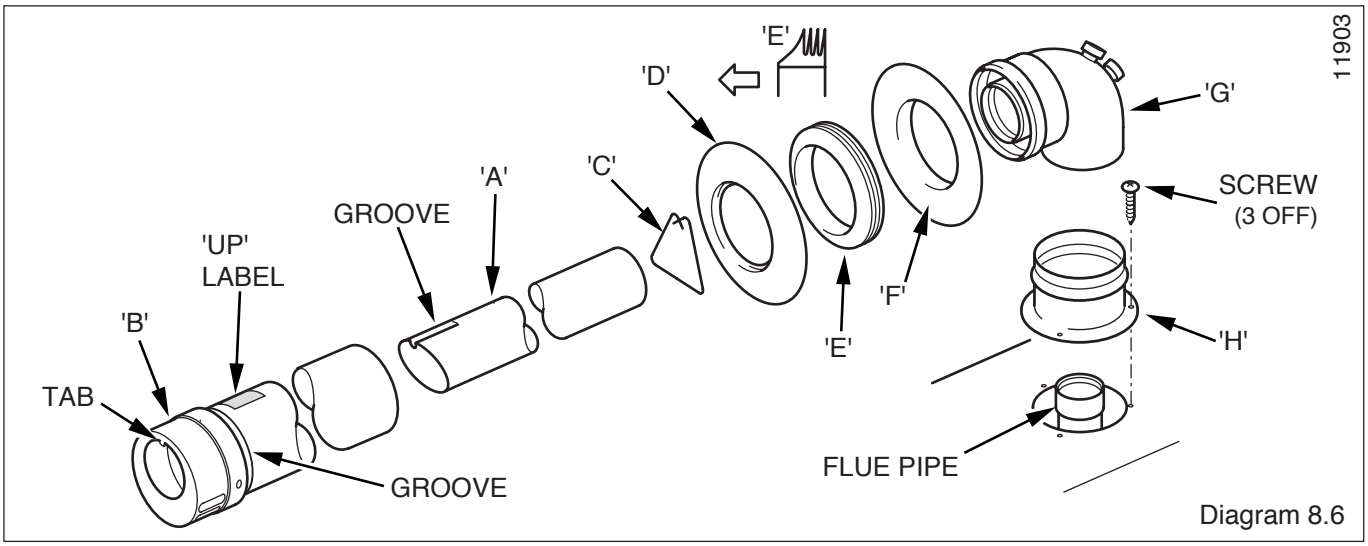

Diagram 8.6

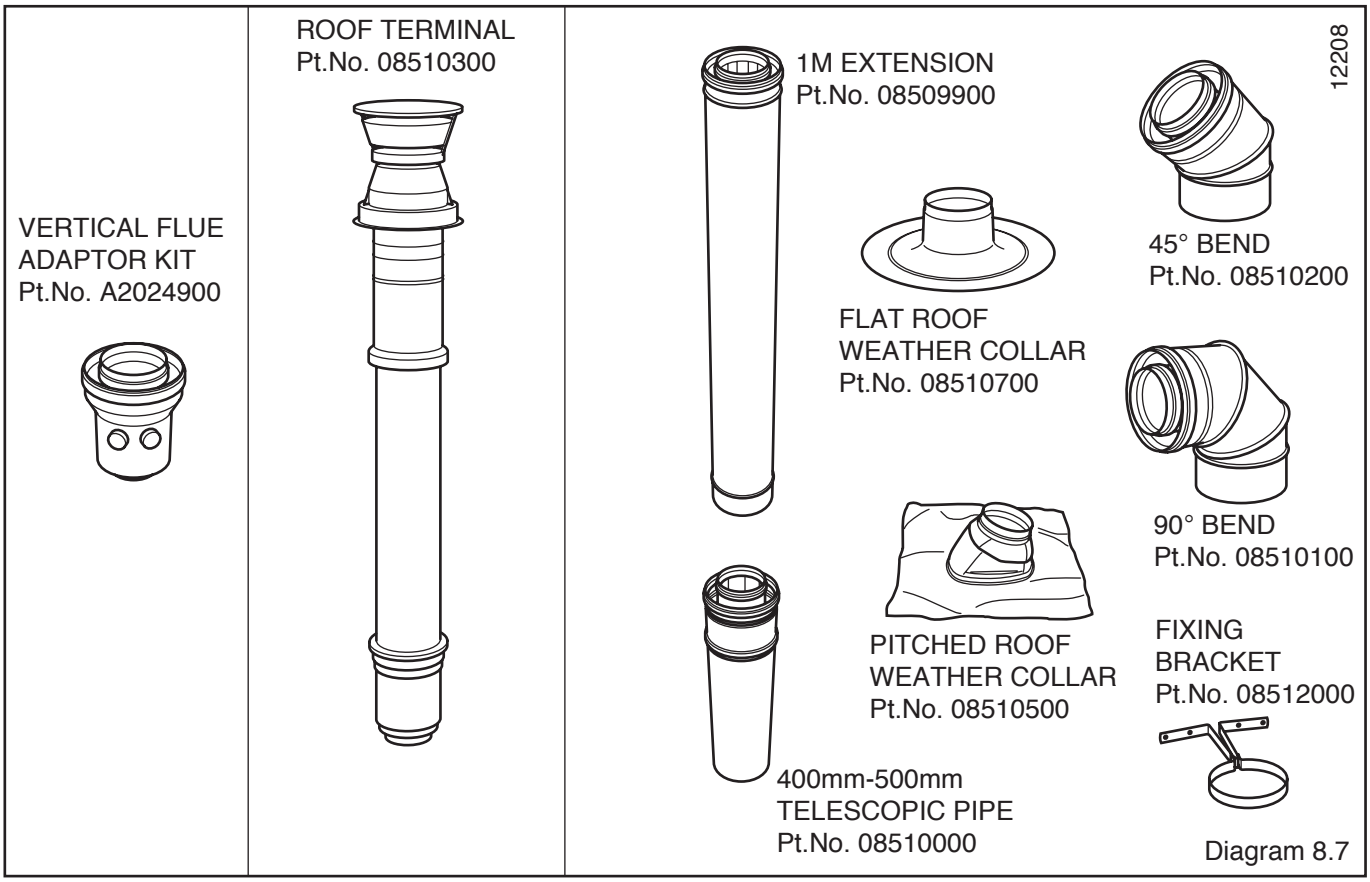

Diagram 8.7

8.7 Vertical Flue

These instructions are for the installation of this vertical flue and its accessories only. **Diagram 8.7** shows the Vertical Flue Adaptor kit and Accessories.

Lubricate the rubber seals prior to inserting flue pipes.

Make sure all joints are properly fitted, sealed and secured.

Remove all burrs from cut pipes.

You can either cut the 1 metre extension pipes cutting equal amounts off both the air duct and flue duct, cut the plain end not the flared end where the sealing rings are fitted, or use the 400mm - 500mm metre adjustable pipe to make up the required flue length.

Note: The 400mm-500mm telescopic pipe if used is fitted to the top outlet of the appliance.

Your selected flue arrangement must be secured with fixing brackets. One fixing bracket to be used for every metre of flue pipe used.

The terminal should be positioned as to cause the least problem with the dispersal of products of combustion and any pluming that may occur.

The use of weather collars are the preferred method when installing the roof terminal.

An Example Vertical Flue Installation. (The flue assembly is an entirely push fit design), **see diagram 8.8.**

Terminal Installation, **see diagram 8.9.**

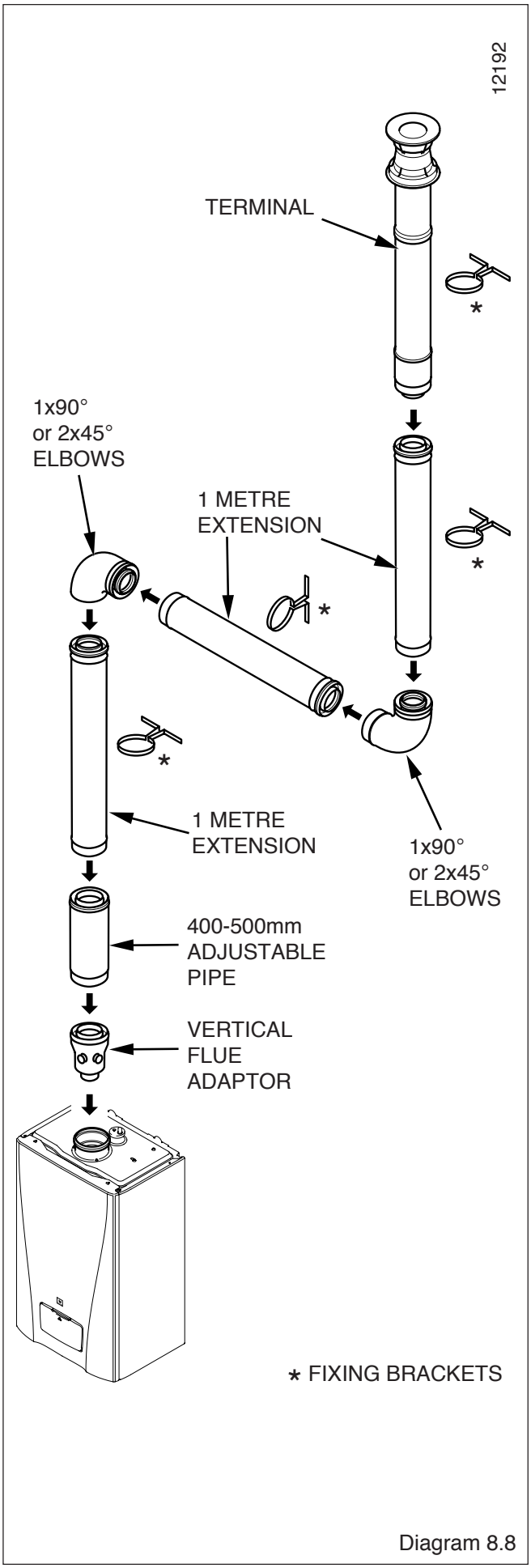

Diagram 8.8

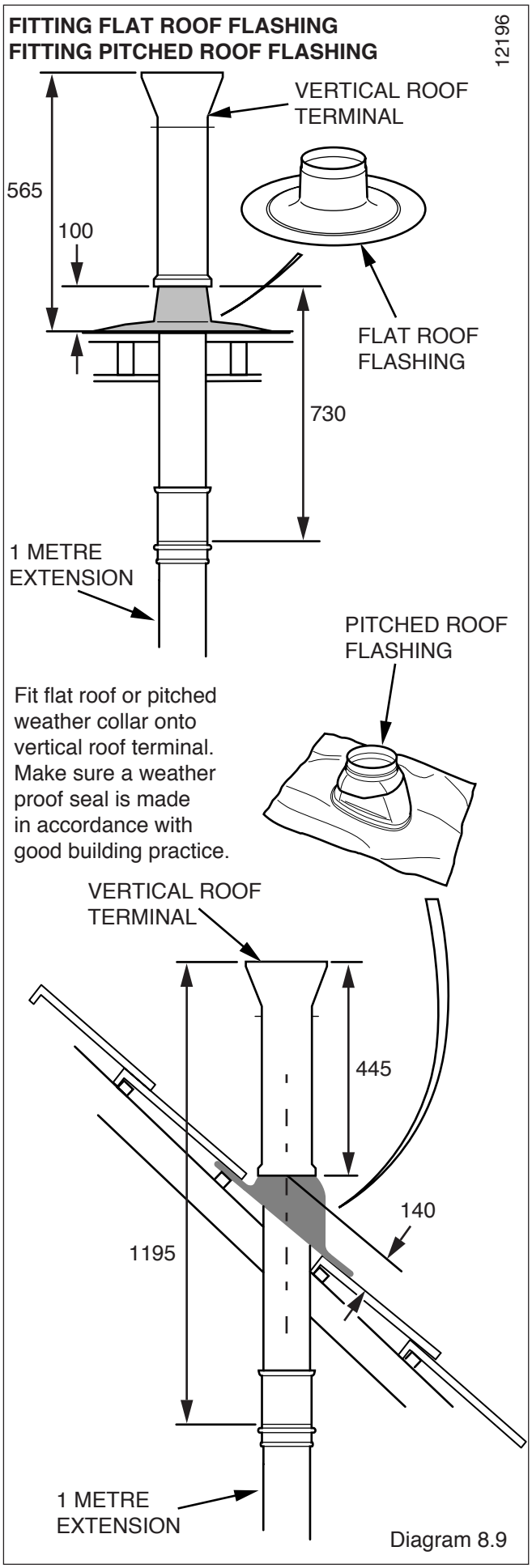

Diagram 8.9

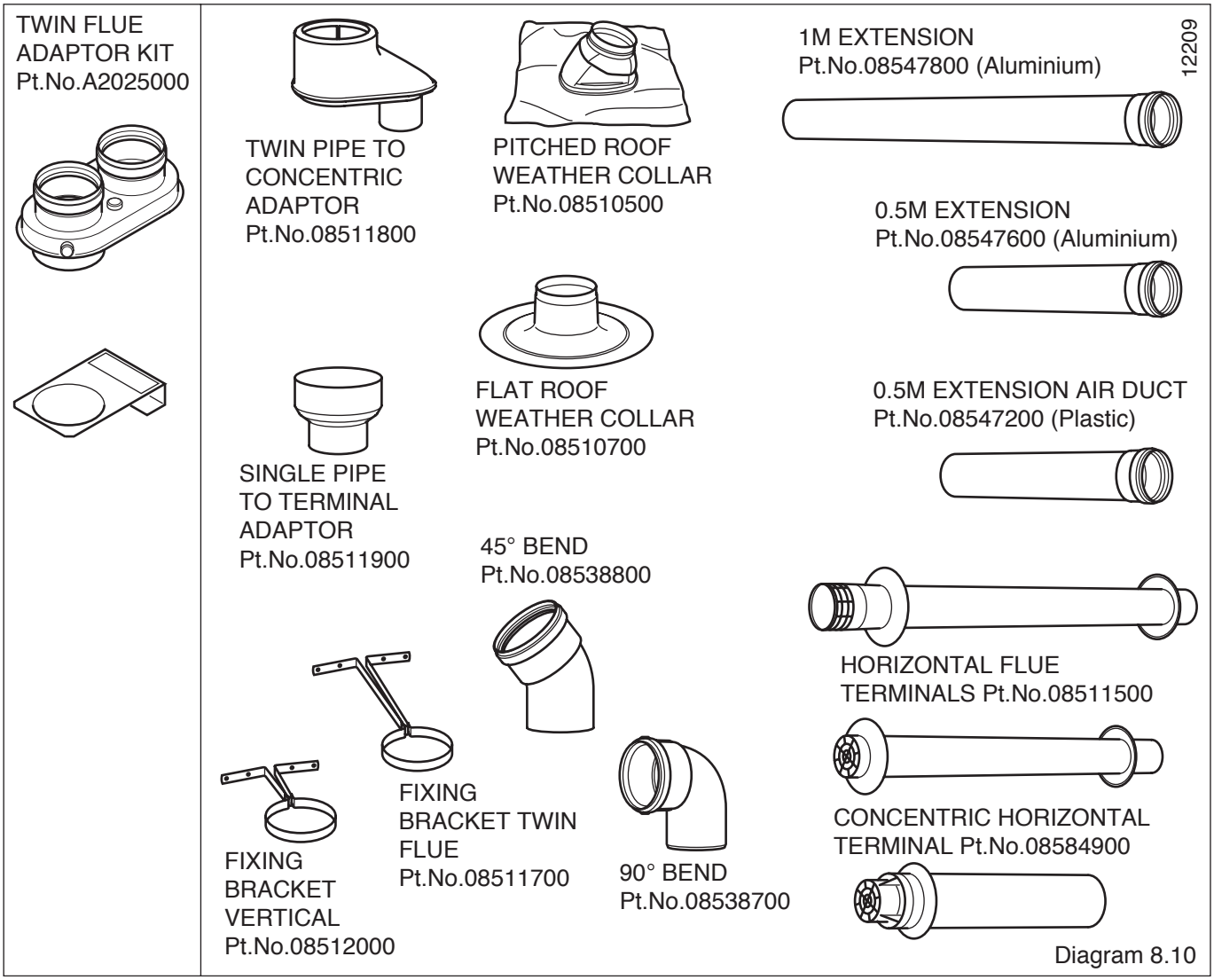

Diagram 8.10

8.10 Twin Flue

These instructions are for the installation of this twin flue and its accessories only. **Diagram 8.10** shows the Twin Flue Adaptor kit and Accessories.

Refer to the Flue Options Guide available from your nearest stockist for flue lengths and sample installations.

Lubricate the rubber seals prior to inserting flue pipes.

Make sure all joints are properly fitted, sealed and secured.

Remove all burrs from cut pipes.

If an extension pipe requires cutting, cut the plain end not the flared end where the sealing rings are fitted.

Your selected flue arrangement must be secured with fixing brackets. One fixing bracket to be used for every metre of flue pipe used.

The terminal should be positioned as to cause the least problem with the dispersal of products of combustion and any pluming that may occur.

The use of weather collars are the preferred method when installing the roof terminal.

FLUE CONFIGURATION EXAMPLE INCLUDING DIMENSIONS TO AID CUTTING AND INSTALLATION

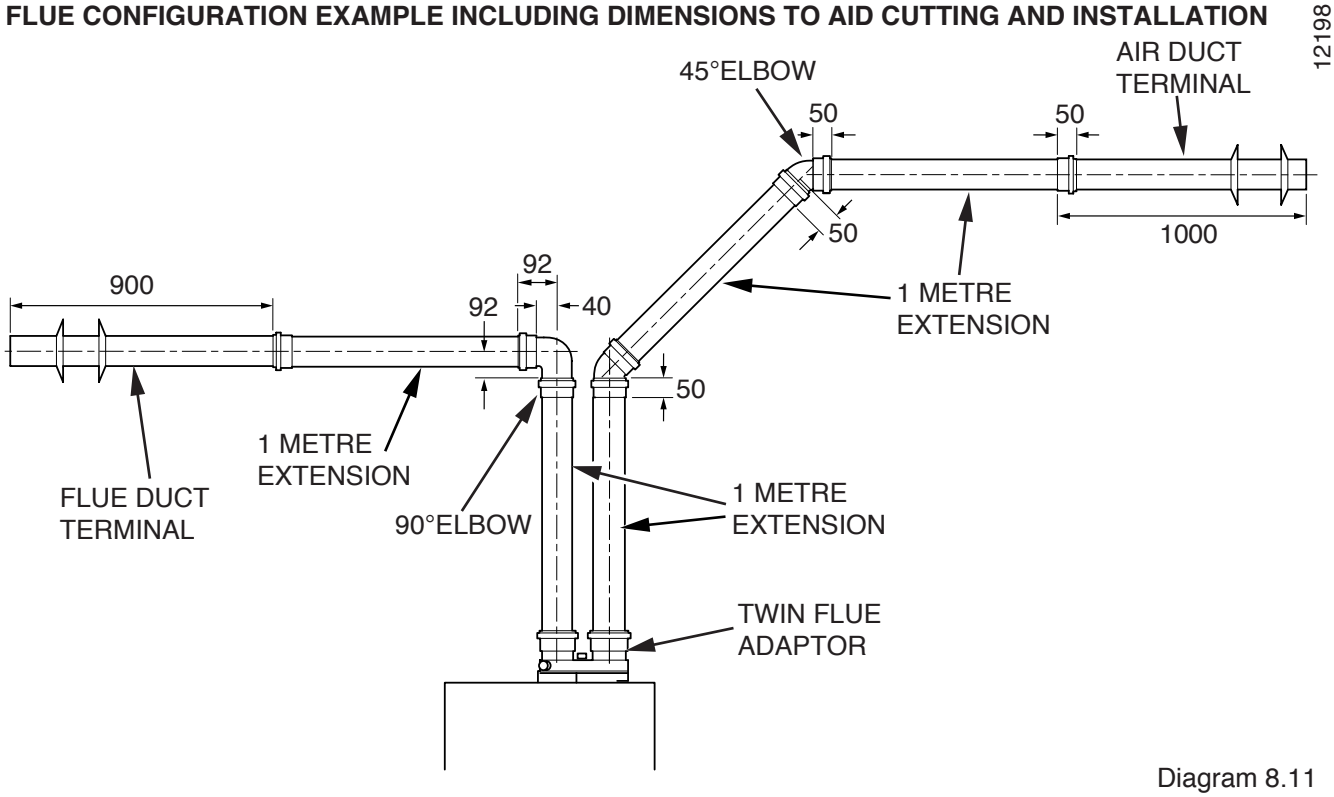

Diagram 8.11

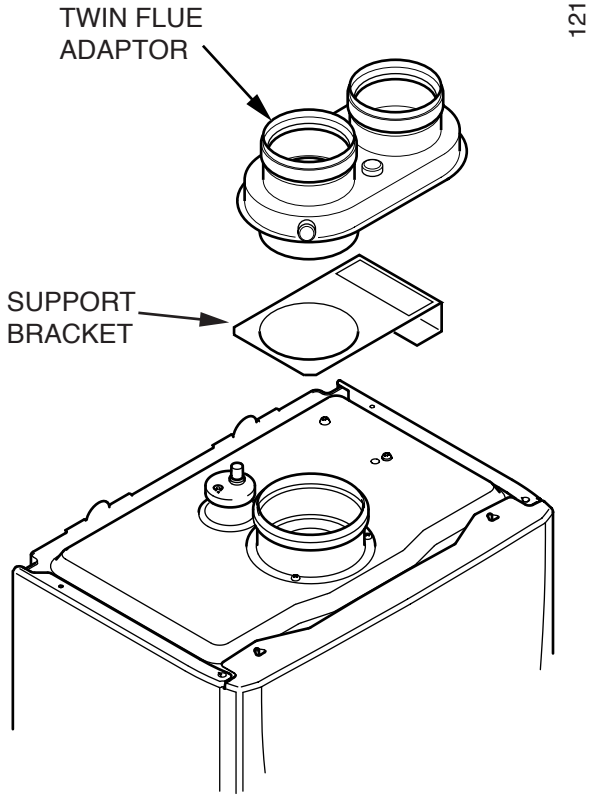

Diagram 8.12

An Example Twin Flue Installation. (The flue assembly is an entirely push fit design), **see diagram 8.11.**

Fitting Twin Flue Adaptor, **see diagram 8.12.**

Fitting Twin Flue Terminals, **see diagram 8.13.**

Fitting Concentric Horizontal Terminal, **see diagram 8.14.**

Fitting Vertical Roof Terminal, **see diagram 8.15.**

Fitting Weather Collars, **see diagram 8.16.**

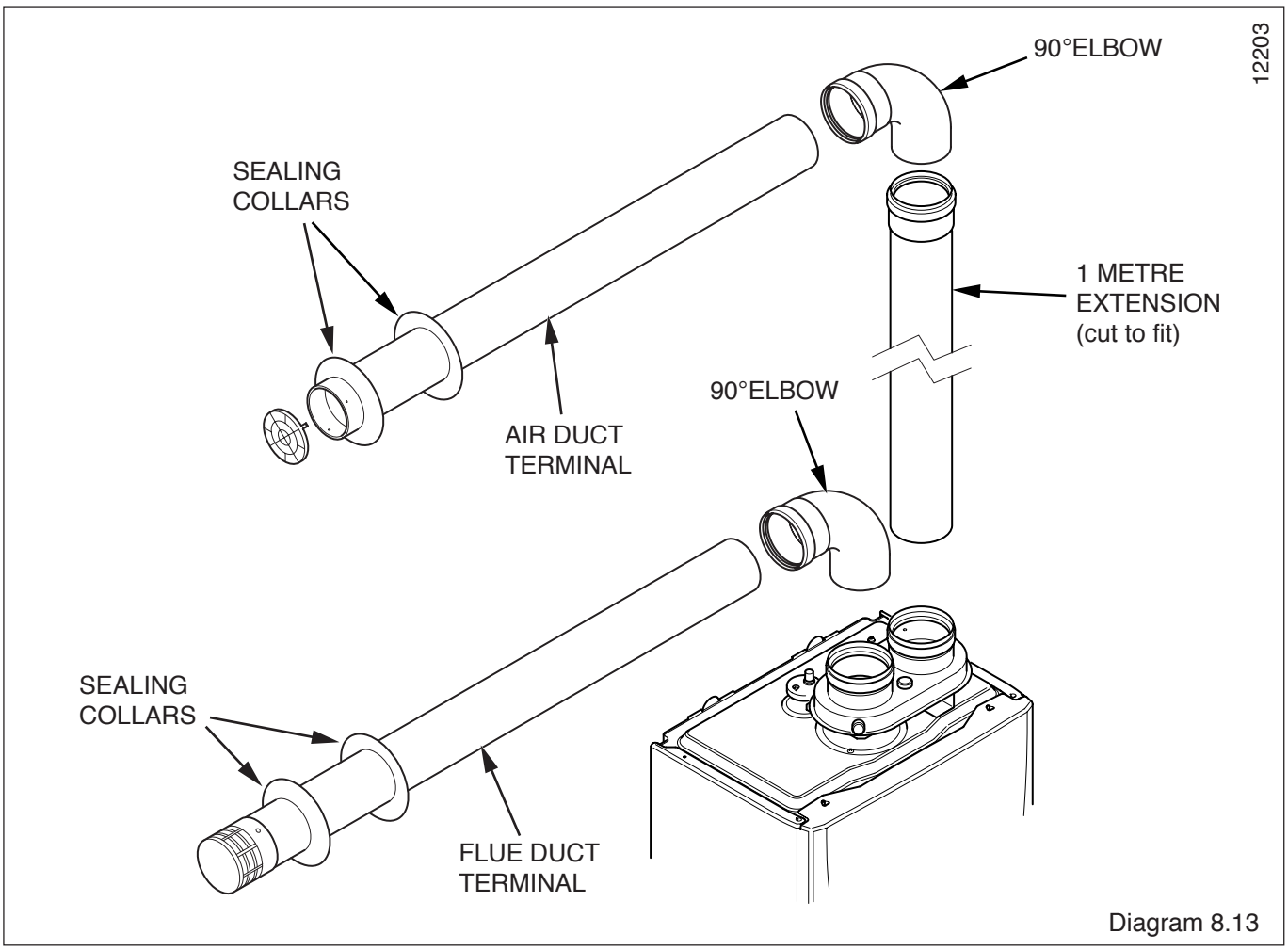

Diagram 8.13

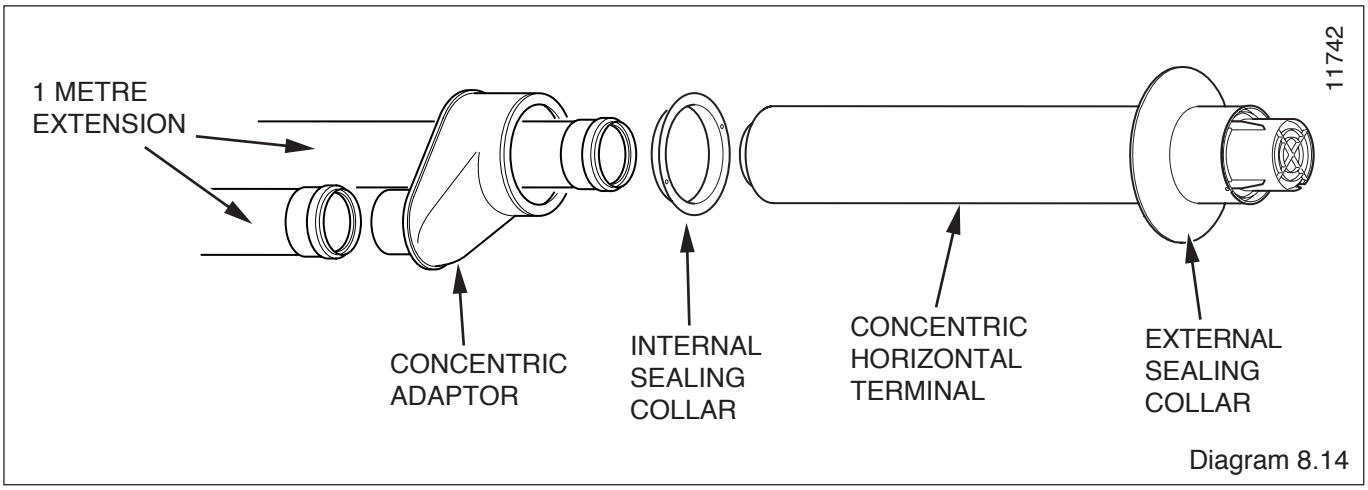

Diagram 8.14

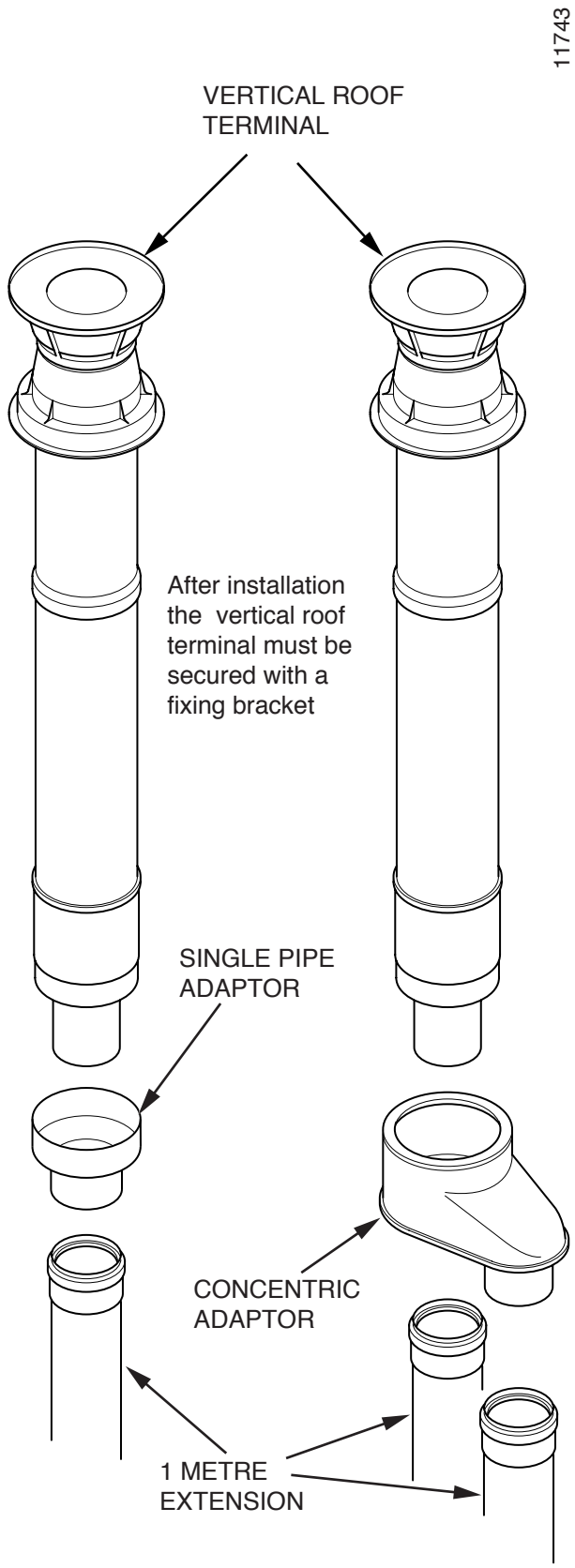

Diagram 8.15

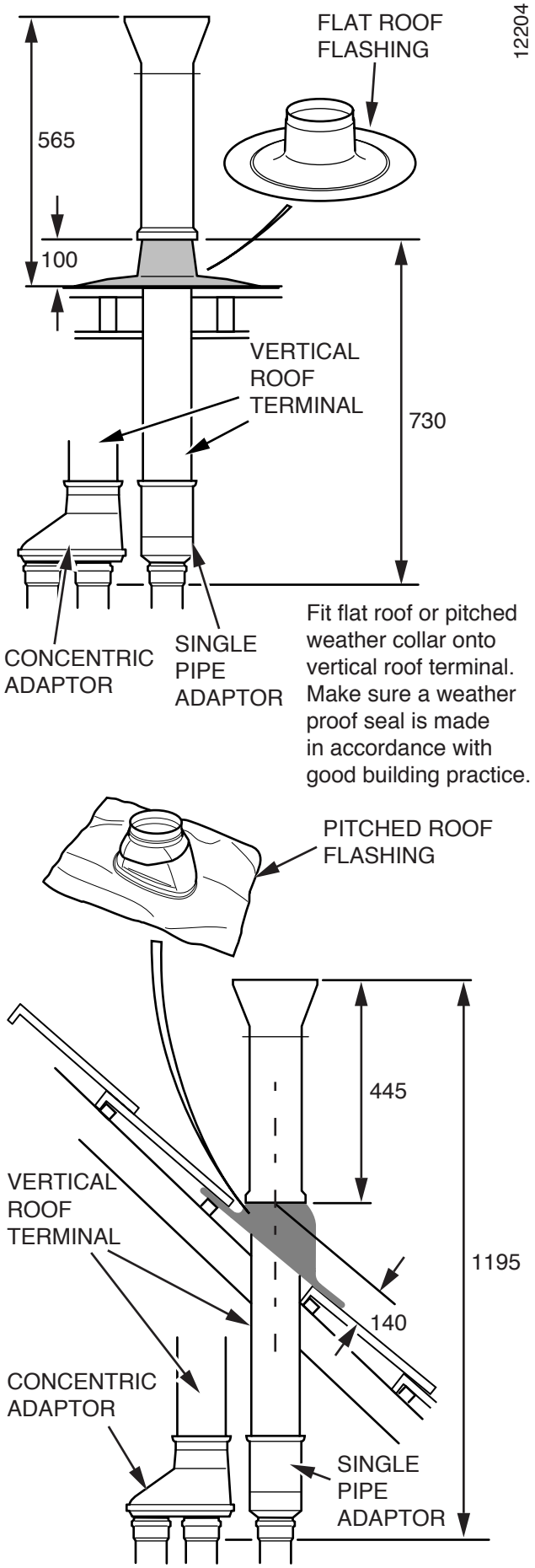

Diagram 8.16

These packs are for the (F24e & F28e ONLY)

Packs supplied with the boiler

1. Isolating valve pack containing
- Heating isolating valves (2 off)
- Domestic cold water isolating valves (1 off)
- Domestic hot water elbow (1 off)
- Gas isolating valve (1 off)

2. Safety discharge pipe pack containing
- Safety discharge valve pipe (1 off)
- 15mm seal washer (1 off)
- Tubing nut (1 off)

3. Installation pack containing
- Installation manual (inc. guarantee card)
- Ø15mm seal washer (1 off) (a)
- Polyacetal gasket (4 off) (d)
- Wall template (1 off)
- Filling device extensions (2 off)
- 3 pole inline plug (1 off)
- Securing screws (3 off)
- Condense adapter (1 off)

4. Pipe pack containing
- Central heating pipe (2 off)
- Domestic water pipe (2 off)
- Gas pipe (1 off)
- 1/2 in. gasket (3 off) (b)
- 3/4 in. gasket (2 off) (c)

(a)	**Ø15mm sealing washer**	
(b)	**1/2 in. gasket**	
(c)	**3/4 in. gasket**	
(d)	**Polyacetal gasket**	

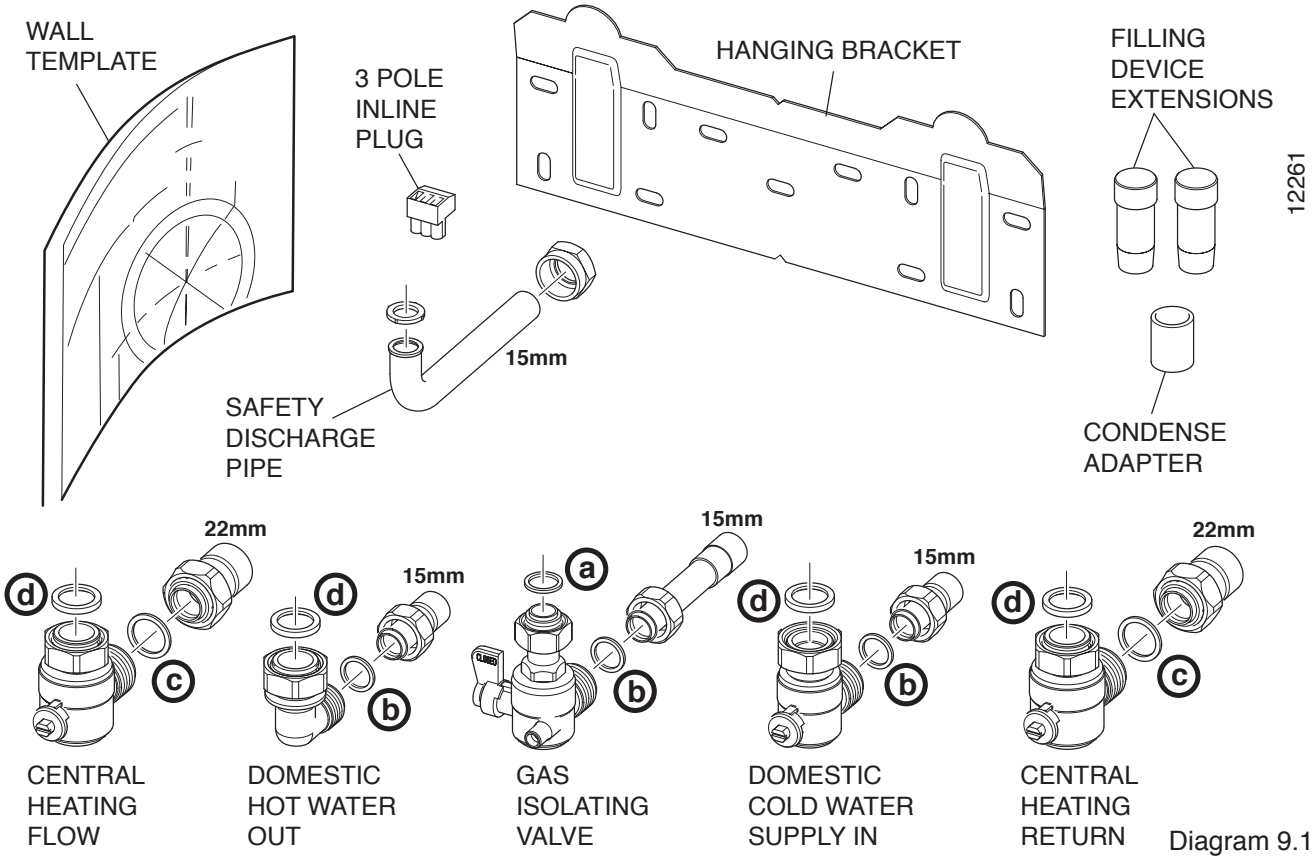

Diagram 9.1

9.1 Gas Connection

The position is shown on the wall template.

A gas pipe, gas isolating valve and gaskets are supplied in packs at the bottom of the boiler packaging.

Refer also to **section 1.**

Remove plug from gas isolating valve.

Fit the sealing washer into the securing nut attached to the gas isolating valve. Connect the gas isolating valve to the boiler. Fit the sealing washer into the securing nut attached to the gas pipe and make good the final connection to the gas isolating valve, **see diagrams 9.1 and 9.2**.

Do not subject the gas isolating valve to heat.

The whole of the gas installation, including the meter, should be inspected, tested for soundness and purged in accordance with the current issue of BS6891 and in IE the current edition of I.S.813 " Domestic Gas Installations ".

Refer also to **Section 1.**

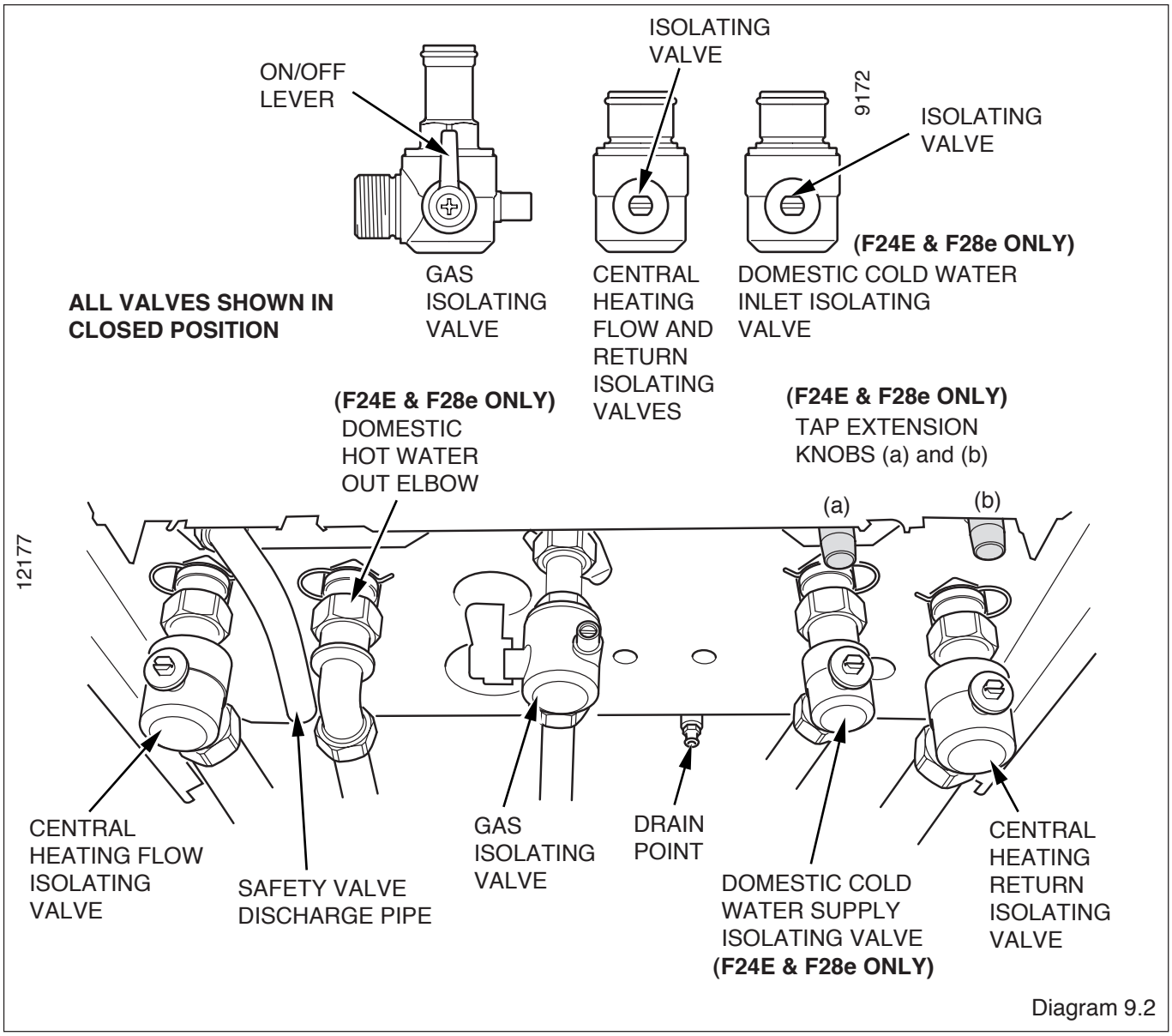

Diagram 9.2

9.2 (F24E & F28e ONLY) Water Connections

The position is shown on the wall template.

A central heating and domestic water pipe, isolation valves, domestic hot water elbow and gaskets are supplied in packs at the bottom of the boiler packaging.

Remove plugs from isolation valves and domestic hot water elbow.

Fit the polyacetal washers onto the isolation valves and domestic hot water elbow. Connect the isolating valves and domestic hot water elbow to the boiler. Fit the sealing washers into the securing nuts attached to the central heating and domestic water pipes and make good the final connection to the isolating valves and domestic hot water elbow, **see diagrams 9.1 and 9.2.**

Do not subject the isolation valves to heat.

(F24e & F28e ONLY) Fit the tap extension knobs to the filling loop valves on the filling loop, **see diagram 9.3.**

Please refer to condensate connection before proceeding, **see section 10.2.**

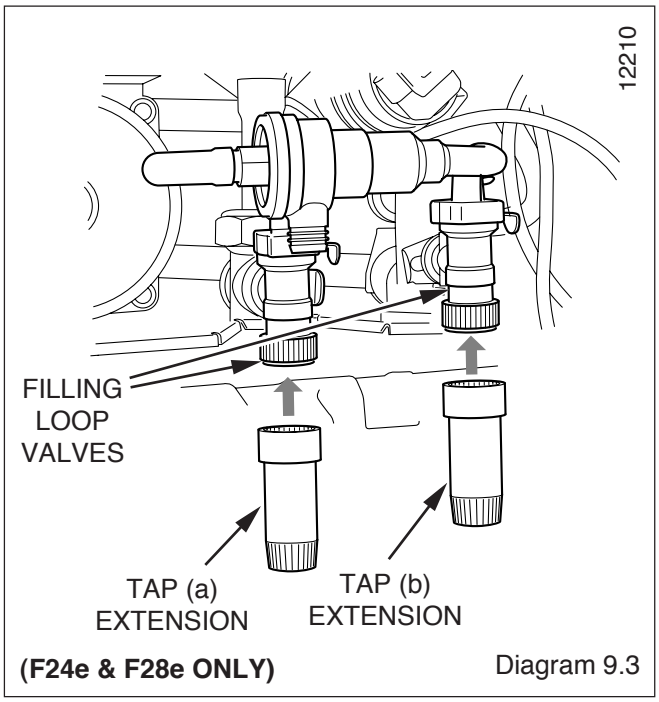

Diagram 9.3

These packs are for the (F28e SB ONLY)

Packs supplied with the boiler

1. Isolating valve pack containing
- Heating isolating valves (2 off)
- Gas isolating valve (1 off)

2. Safety discharge pipe pack containing
- Safety discharge valve pipe (1 off)
- 15mm seal washer (1 off)
- Tubing nut (1 off)

3. Installation pack containing
- Installation manual (inc. guarantee card)
- Ø15mm seal washer (1 off) (a)
- Polyacetal gasket (2 off) (d)
- Wall template (1 off)
- 3 pole inline plug (1 off) **(F28e ONLY)**
- Securing screws (3 off)
- Condense adapter (1 off)

4. Pipe pack containing
- Central heating pipe (2 off)
- Domestic water pipe (2 off) **(F28e ONLY)**
- Gas pipe (1 off)
- 1/2 in. gasket (3 off) (b)
- 3/4 in. gasket (2 off) (c)

a	**Ø15mm sealing washer**	
b	**1/2 in. gasket**	
c	**3/4 in. gasket**	
d	**Polyacetal gasket**	

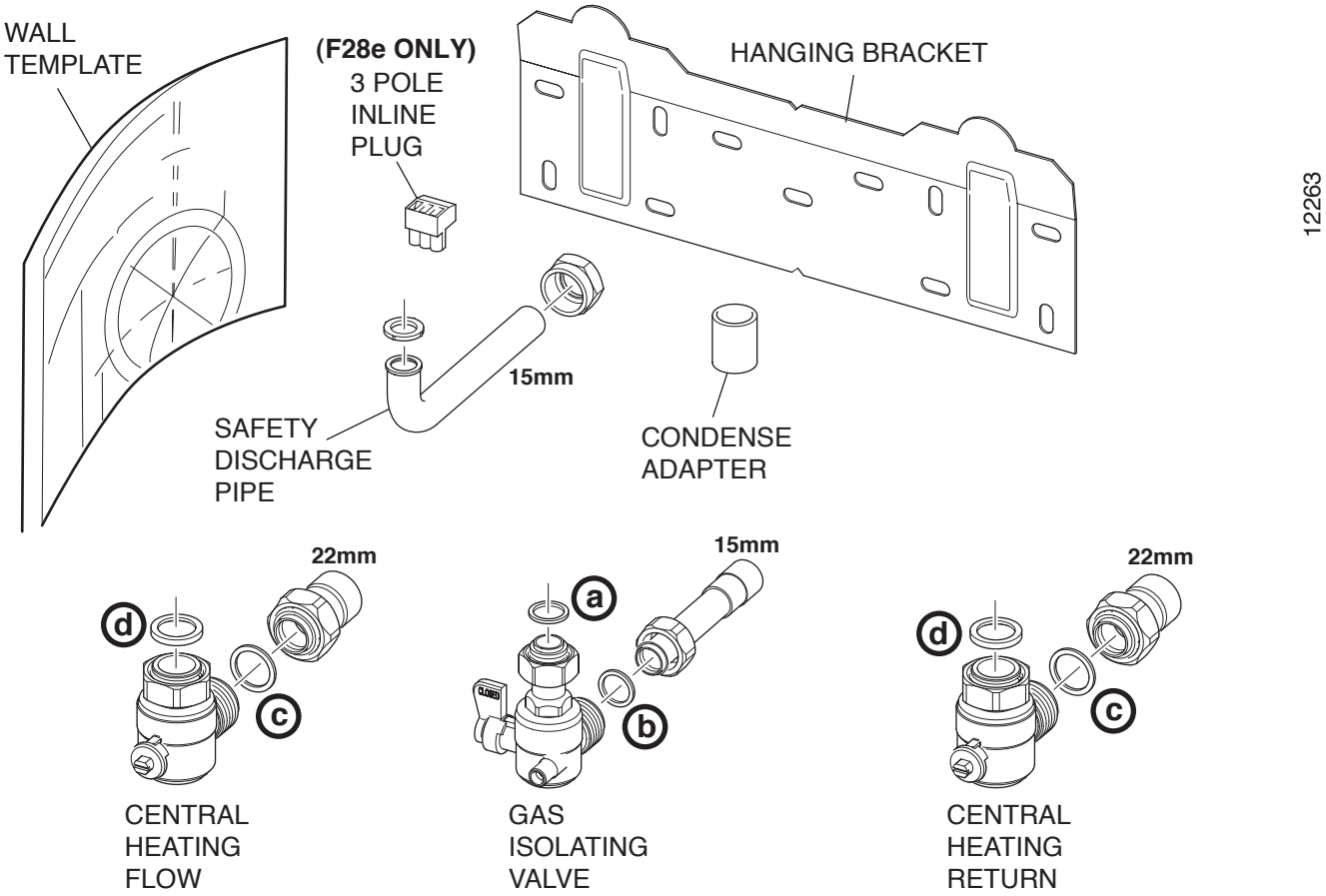

Diagram 9.1a

9.2 (F28e SB ONLY) Water Connections

The position is shown on the wall template.

A central heating water pipe, isolation valves and gaskets are supplied in packs at the bottom of the boiler packaging.

Remove plugs from isolation valves.

Fit the polyacetal washers onto the isolation valves. Connect the isolating valves to the boiler. Fit the sealing washers into the securing nuts attached to the central heating water pipes and make good the final connection to the isolating valves, **see diagrams 9.1a and 9.2.**

Do not subject the isolation valves to heat.

Please refer to condensate connection before proceeding, **see section 10.2.**

10 Safety Discharge Valve and Condensate Connections

10.1 Safety Discharge Valve

A short discharge pipe with nut and washer are supplied in a pack at the bottom of the boiler packaging. Connect the discharge tube to the heating safety valve. This must be extended, using not less than 15mm o.d. pipe, to discharge, in a visible position, outside the building, facing downwards, preferably over a drain, **see diagram 10.1.**

WARNING: it must not discharge above an entrance, window or any type of public access area.

IMPORTANT NOTE: To facilitate servicing of the appliance, the discharge pipe MUST ONLY be extended using compression fittings.

The pipe must have a continuous fall and be routed to a position so that any discharge of water, possibly boiling, or steam cannot create any danger to persons, damage to property or external electrical components and wiring. Tighten all pipe connection joints.

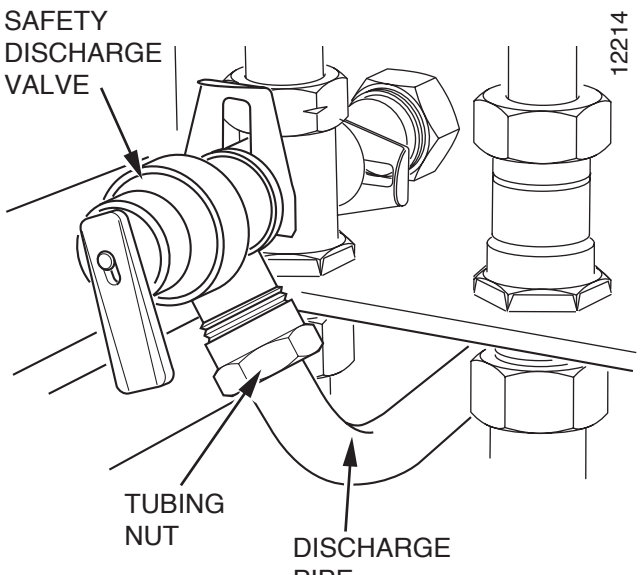

(F24e/F28e SHOWN) Diagram 10.1

10.2 Condensate Drain Connection

The condensate drain connection is beside the pump at the rear of the boiler, **see diagram 10.2**. A condense adaptor for 21.5mm plastic overflow pipe is supplied loose in the installation pack and should be used to fit to the drain connection, if required, to discharge condensate to a drain. The drain pipe should have a fall of a least 2.5° away from the boiler.

Condensate should, if possible be discharged into the household internal drainage system. If this is not practicable, discharge can be allowed into the external household drains or a purpose designed soak away, refer to **diagram 10.3**.

It is recommended that any external condensate drain pipe is insulated and also preferably of 32mm diameter, to prevent freezing in adverse weather conditions.

The condensate is discharged periodically in 'slugs' by syphonic action.

It is not necessary to provide air breaks or extra traps in the discharge pipe as there is already a 75mm. high trap inside the boiler. Fitting an extra trap may cause the boiler siphon to work incorrectly.

Refer to BS5546 or BS6798 for advice on the disposal of boiler condensate.

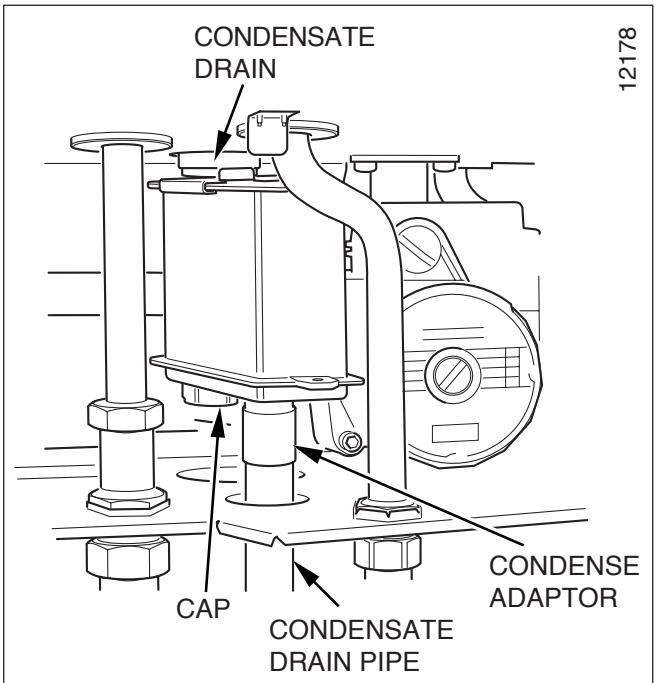

(F24e/F28e SHOWN) Diagram 10.2

12333

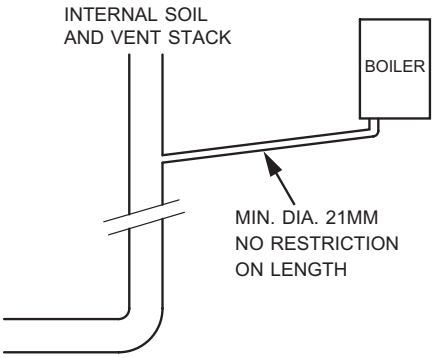

Internal Soil and Vent Pipe

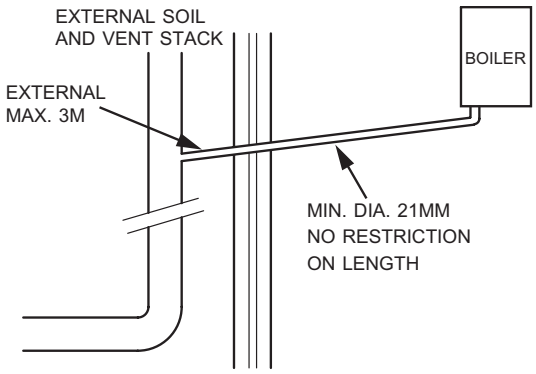

External Soil and Vent Pipe or Rainwater Pipe

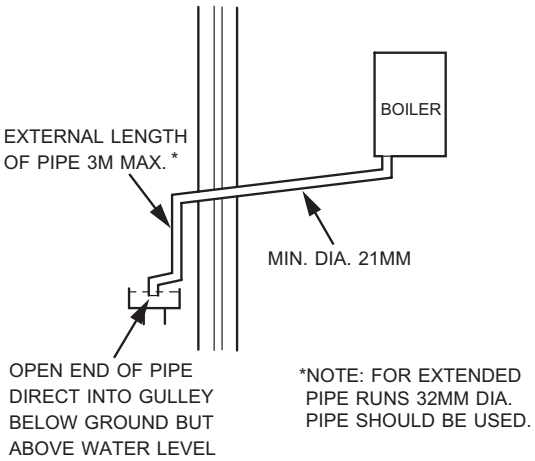

External Termination to a Gulley or Hopper

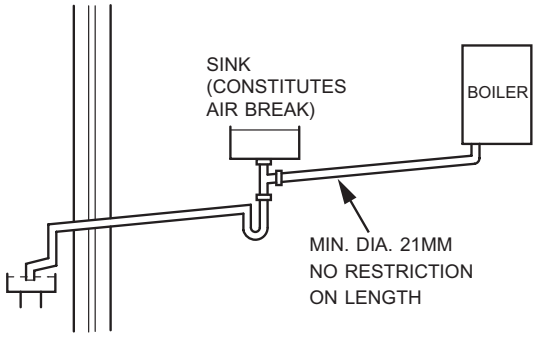

Internal Termination into Combined Sink Waste

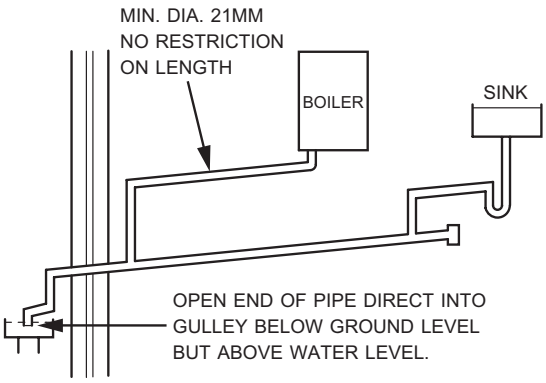

Internal Termination Downstream of Sink Waste

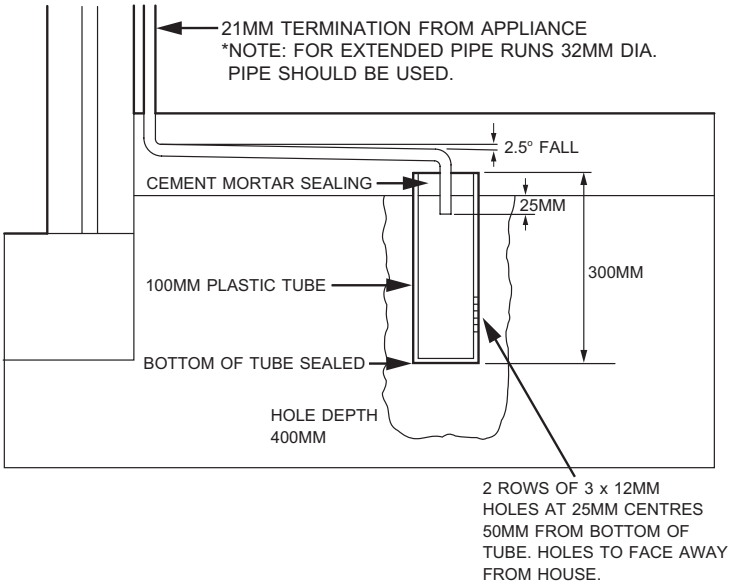

External Termination into Soakaway

NOTE: PIPEWORK SHOULD ALWAYS FALL AWAY FROM BOILER BY AT LEAST 2.5^0

Diagram 10.3

11 Electrical Connections

WARNING: This appliance must be earthed. This appliance must be wired in accordance with these instructions. Any fault arising from incorrect wiring cannot be put right under the terms of the Saunier Duval guarantee.

All system components must be of an approved type.

Do not interrupt the mains supply with a time switch or programmer.

Connection of the whole electrical system and any heating system controls to the electrical supply must be through a common isolator.

Isolation should preferably be by a double pole switched fused spur box having a minimum contact separation of 3mm on each pole. The fused spur box should be readily accessible and preferably adjacent to the boiler. It should be identified as to its use.

A fused three pin plug and shuttered socket outlet may be used instead of a fused spur box provided that:

a) They are not used in a room containing a fixed bath or shower.

b) Both the plug and socket comply with the current issue of BS1363.

IMPORTANT: If a replacement mains supply cable is required it must be purchased. Part Number S1008600.

11.1 External Controls - Voltage Free

WARNING: UNDER NO CIRCUMSTANCES MUST ANY MAINS VOLTAGE BE APPLIED TO ANY OF THE TERMINALS ON THE VOLTAGE FREE HEATING CONTROLS CONNECTION.

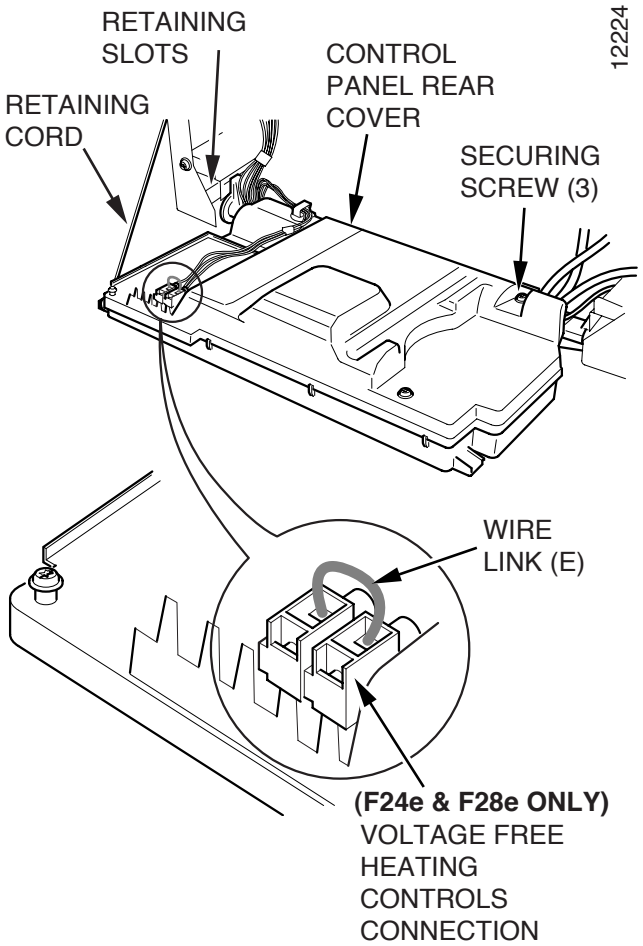

Diagram 11.1

Lower the control panel.

This boiler will operate continuously on heating as supplied, if the wire link (E), fitted between the two terminals of the heating controls connection, is left in place, **see diagram 11.1.**

System heating controls e.g. Room thermostat, should be fitted in accordance with the rules in force.

Refer to **diagram 11.2**.

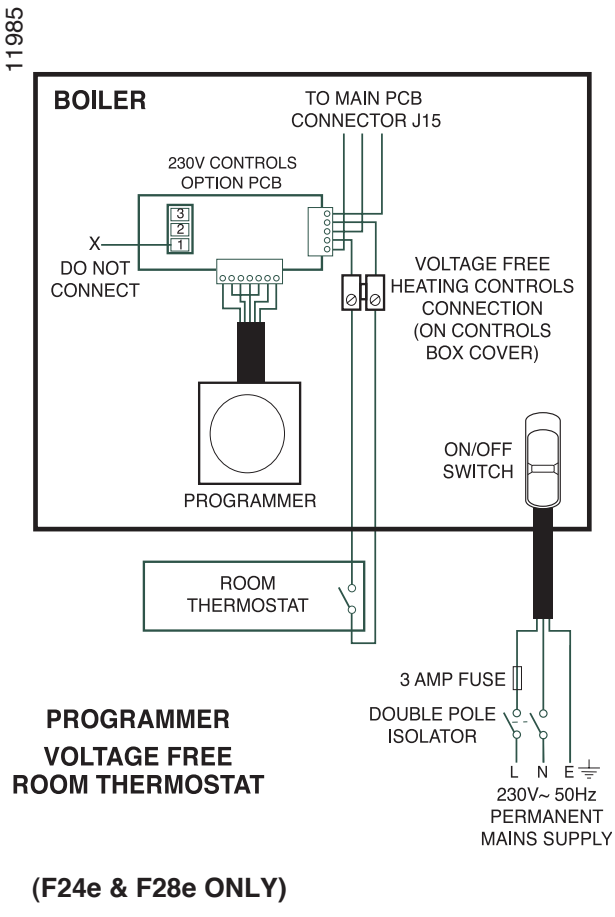

Diagram 11.2

11.2 External Controls - Mains Voltage

WARNING: UNDER NO CIRCUMSTANCES MUST ANY MAINS VOLTAGE BE APPLIED TO ANY OF THE TERMINALS ON THE VOLTAGE FREE HEATING CONTROLS CONNECTION PLUG.

Remove the MAINS VOLTAGE HEATING CONTROLS CONNECTION PLUG from the fittings pack and install on the 230V control board as the following text describes.

Gain access to the 230V controls board by unclipping the control panel user interface and carefully lower forward, see **diagram 11.3.**

Remove the wire link (E) from the voltage free heating controls connection plug **diagram 11.3,** connect the external controls as shown in **diagram 11.5,** connect the mains voltage heating controls connection plug and external controls cable to the 230V controls board, then route the external controls cable as shown in **diagram 11.4.**

Gain access to the rear of the control panel, **see diagram 11.1.**

Thread the external controls cable through the front, close the control panel user interface and secure the cable in the strain relief, **see diagram 11.4.**

Route the external controls cable through to the rear of the control panel where the other cables exit.

External controls should be fitted in accordance with the rules in force.

Refer to **Section 15 wiring diagram.**

11.3 Electrical Connections - Testing

Carry out preliminary electrical system checks as below:

1. Test insulation resistance to earth of mains cables.
2. Test the earth continuity and short circuit of cables.
3. Test the polarity of the mains.

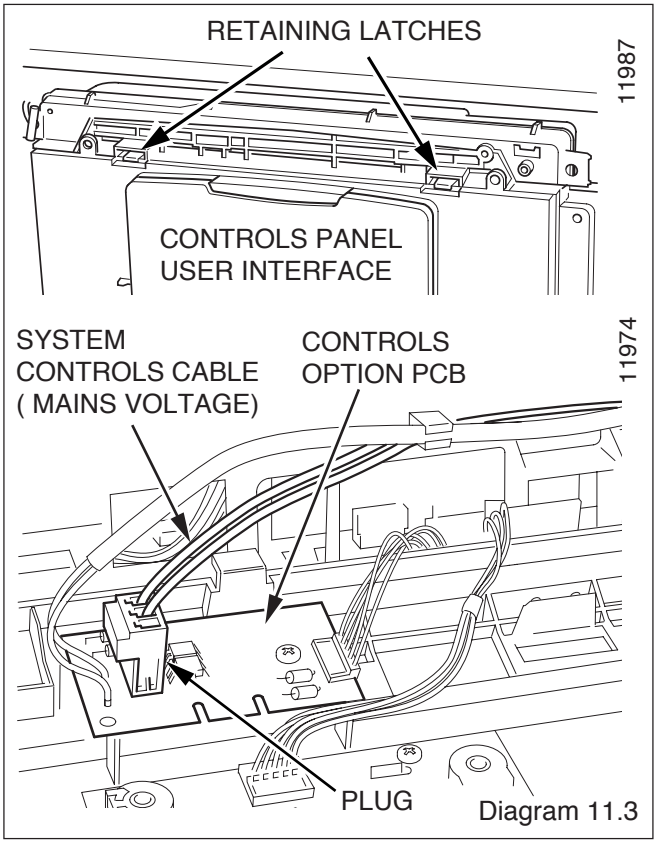

Diagram 11.3

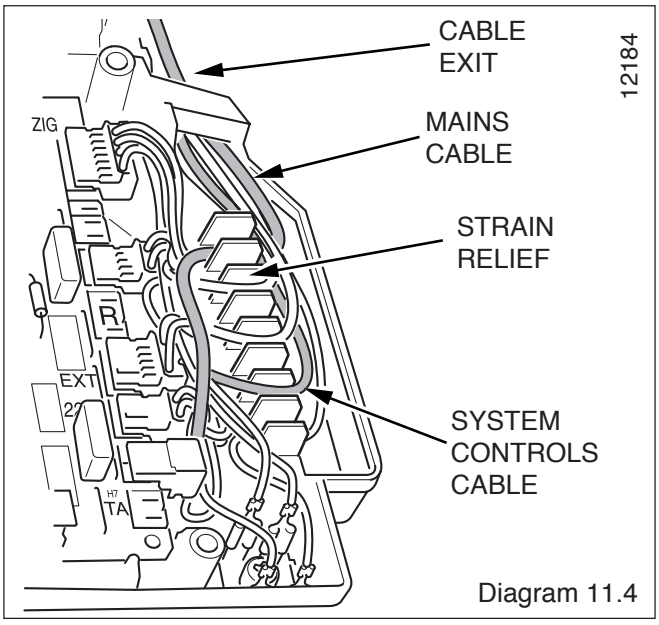

Diagram 11.4

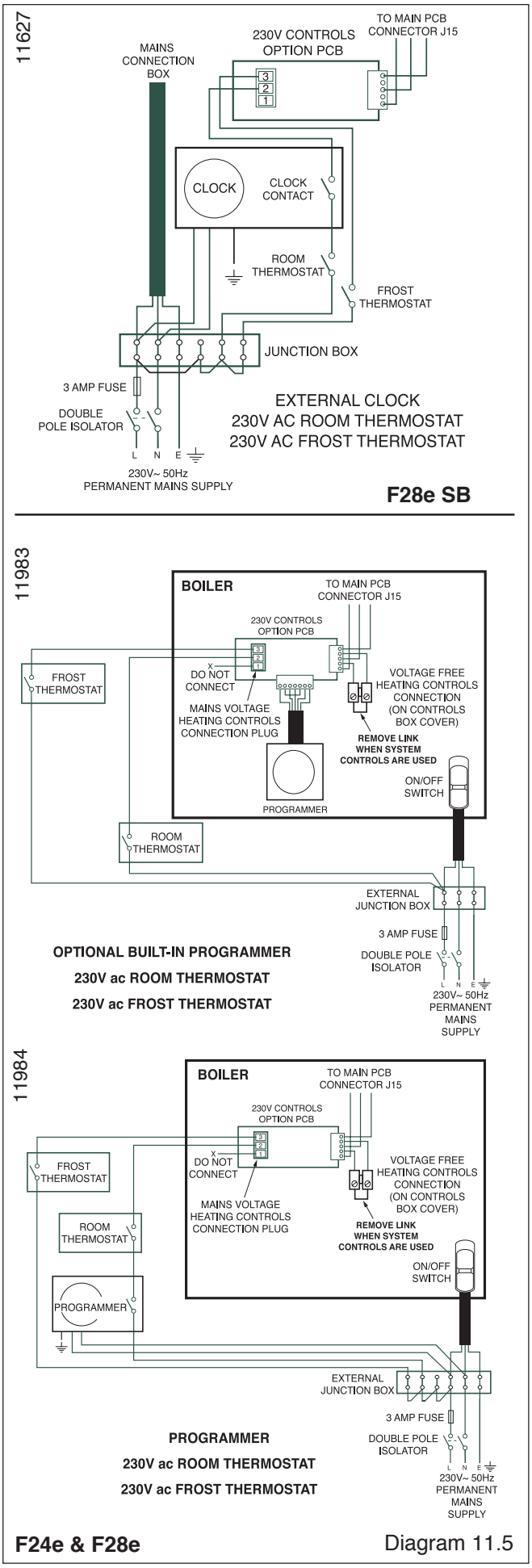

Diagram 11.5

12 Commissioning

Please ensure the "Benchmark" logbook is completed and left with the user.

The commissioning and first firing of the boiler must only be done by a **competent person**.

Do not operate the boiler without water.

12.1 Gas Installation

The whole of the gas installation, including the meter, should be inspected, tested for soundness and purged in accordance with the current issue of BS6891 and in IE the current edition of I.S.813 "Domestic Gas Installations".

12.2 Filling the system 1 to 8

1

Make sure that :

- The boiler is connected to the electrical supply.
- The gas service cock is open.
- Switch OFF (0)

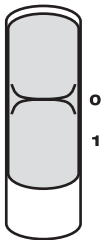

2

- Open the three boiler isolating valves.

The slot of the screw corresponds to flow direction. (Turn anti-clockwise to open fully)

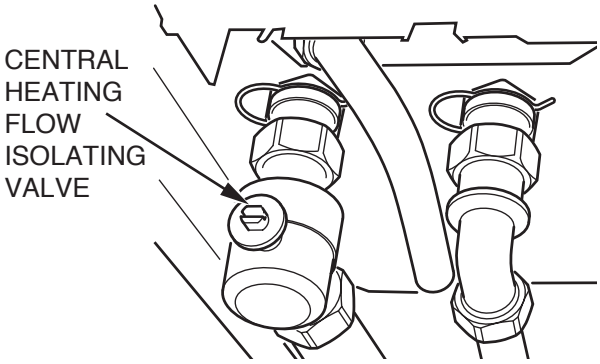

(F24e & F28e ONLY)

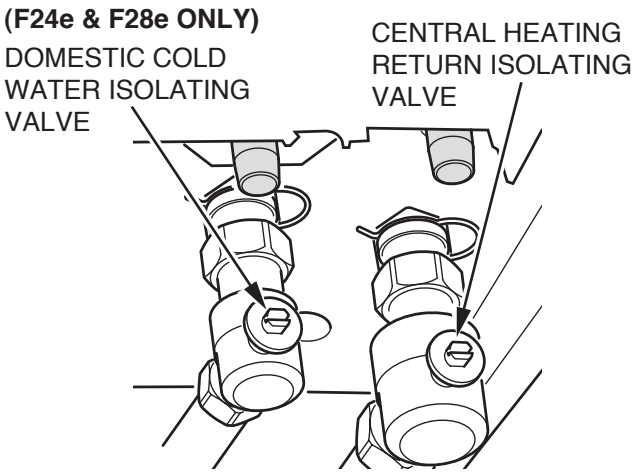

(F24e/F28e SHOWN)

3

- Undo cap on automatic air vent on top of boiler and leave undone.

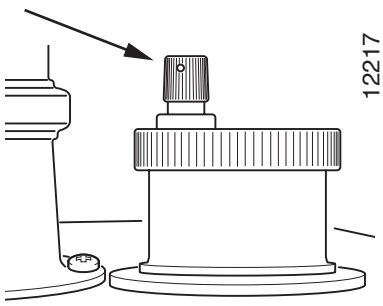

4

- Switch ON (I)
- Fill the system until the pressure gauge reads 1.0 bar, reter to Section 3.2and 3.3.

5

- Bleed each radiator to remove air, ensure all bleed screws are re-tightened.
- If necessary repressurise the system, refer to procedure **4.**

6

- Leave cap on automatic air vent on top of boiler open. (see procedure **3**)

7

- Flush the domestic hot water system by opening the hot water taps for several minutes.

8

- Ensure the display indicates a system pressure of 1.0 bar, adjust if necessary, refer to Section 3.2.

12.3 Initial Lighting

- Adjust heating temperature to maximum, refer to User Controls and Lighting.

- Check that any system controls, if fitted, are calling for heat (set room thermostat to maximum).

- Allow the temperature to rise to the maximum value, with all radiator valves open. The temperature rise will cause release of the gases contained in the water of the central heating system.

- Gases driven towards the boiler will be automatically released through the automatic air vent. The gases trapped at the highest point of the system must be released by bleeding the radiators.

- Check the burner gas rate required, ten minutes after lighting. Refer to Data Label on the inner casing panel. Should there be any doubt about the gas rate it should be checked at the meter.

The approximate gas rate is for guidance only
(MAX.) 2.7 m^3/h (97 ft^3/h) (MIN.) 0.5 m^3/h (19 ft^3/h)

On reaching maximum temperature, the boiler should be turned off and the system drained as rapidly as possible whilst still hot.

- Refill system to a pressure of 1.0 bar and vent as before.

- Restart boiler and operate until a maximum temperature is reached. Shut down boiler and vent heating system. If necessary, top up heating system and make sure that a pressure of at least 1 bar is indicated when system is COLD.

12.4 DHW Pre-heat Function

There is a domestic hot water pre-heat function which is factory set to on.

With pre-heat "On" the boiler will light every hour, or after a demand, to reheat the primary domestic hot water circuit if necessary.

The pre-heat function can be turned off if required but the DHW response will be affected.

To turn the pre-heat off, slide dip switch 1 to the 'ON' position. Refer to **section 11.3** to gain access to the user interface PCB.

On completion adjust the temperature control and any system controls to their required settings. In addition it is neccessary to complete the "Benchmark" logbook.

For IE, it is neccessary to complete a "Declaration of Conformity" to indicate compliance to I.S.813. An example of this is given in the current edition of I.S.813.

Testing Flue Gases: If any doubt exists that the flue products are not exhausting correctly, investigate by use of a gas analyser (FGA).

12.5 Instruct the User

Instruct and demonstrate the lighting procedure and advise the user on the safe and efficient operation of the boiler.

Instruct on and demonstrate the operation of any heating system controls.

Advise the user on the use and maintenance of any scale reducer and pass on any relevant instructional documents.

Advise that to ensure the continued efficient and safe operation of the boiler it is recommended that it is checked and serviced at regular intervals. The frequency of servicing will depend upon the installation conditions and usage, but in general, once a year should be enough.

Draw attention, if applicable, to the current issue of the Gas Safety (Installation and Use) Regulations, Section 35, which imposes a duty of care on all persons who let out any property containing a gas appliance in the U.K.

The user shall not interfere with or adjust sealed components.

It is the Law that any servicing is carried out by a **competent person**.

Advise the user of the precautions necessary to prevent damage to the system, boiler and the building, in the event of the heating system being out of use during frost or freezing conditions.

Advise the user that the permanent mains electrical supply SHOULD NOT be switched off, as the built in frost protection and pump saver (anti sieze) program would not be operable.

Reminder, leave these instructions and the 'Benchmark' logbook with the user.

For IE, it is necessary to complete a "Declaration of Conformity" to indicate compliance to I.S.813. An example of this is given in the current edition of I.S.813.

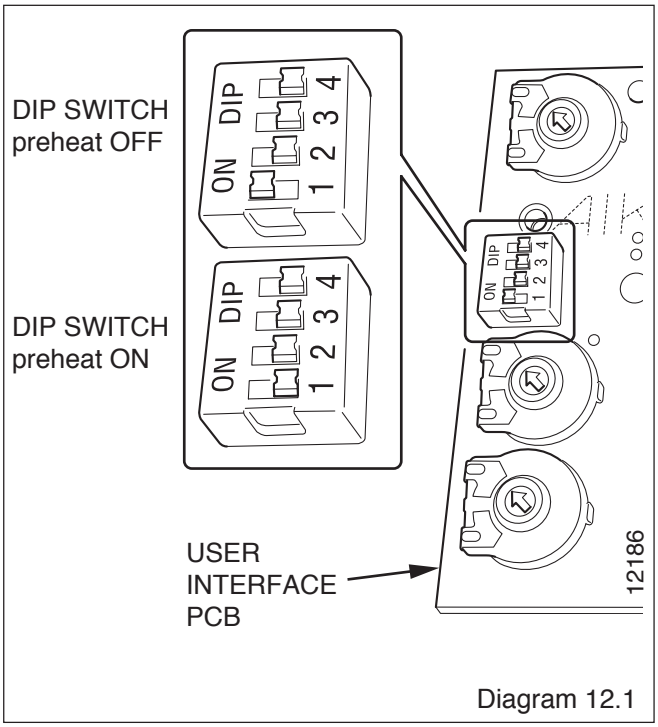

Diagram 12.1

13.1 General

Measurement of the products of combustion can be achieved by connection of a probe to the flue elbow or alternatively to the sample point at the base of the flue outlet pipe inside the boiler**, see diagram 13.2.**

To gain access remove the front casing and inner casing panels, **see diagram 13.1.**

To remove the front casing panel remove the two securing screws and lift off the panel from two retaining lugs, **see diagram 13.1.**

To remove the inner casing panel remove the two securing screws and lift off the panel from two retaining lugs, **see diagram 13.1.**

Before commencing with a service or replacement of parts the boiler should be isolated from the electrical supply and the gas supply should be turned off at the gas isolation valve, **see diagram 9.2.**

All routine servicing requirements can be achieved by the removal of the front casing and inner casing panels only.

Unless stated otherwise any part removed during servicing should be replaced in the reverse order to removal.

Servicing should always include the removal of any debris from the condensate pipe and siphon, **refer to Section 13.5.**

After completing any servicing of gas carrying components, ALWAYS test for gas soundness and carry out a functional test of the controls.

Testing Flue Gases: If any doubt exists that the flue products are not exhausting correctly, investigate by use of a gas analyser (FGA).

13.2 Spark Electrode

Disconnect the electrode lead and two securing screws. Withdraw the spark electrode carefully from the combustion chamber, **see diagram 13.3.**

NOTE: On reassembly do not overtighten screws.

Inspect the tips for damage.

Clean away any debris and check the spark gap is 3.5 to 4.5 mm.

Check the electrode sealing gasket for signs of damage and replace if necessary.

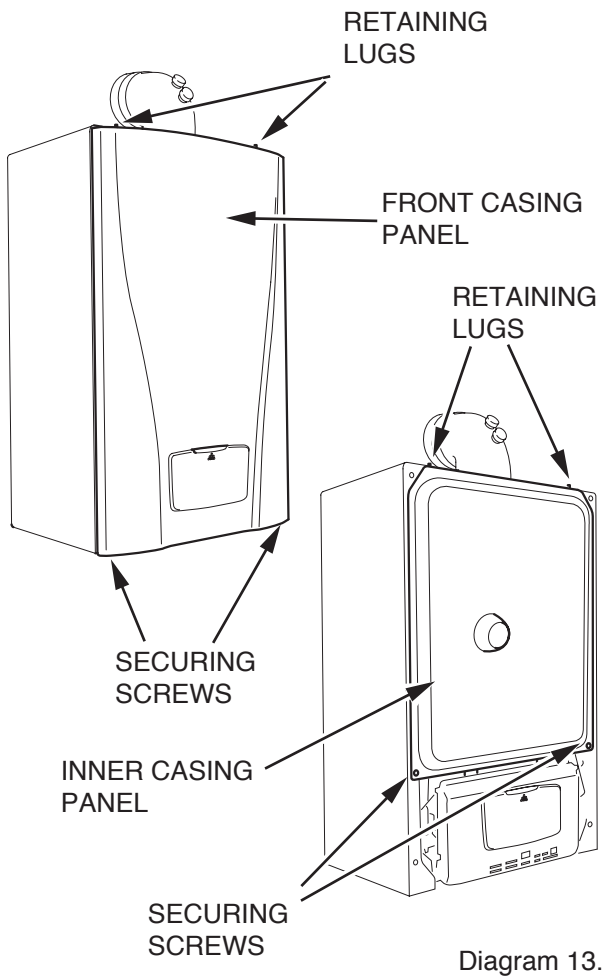

Diagram 13.1

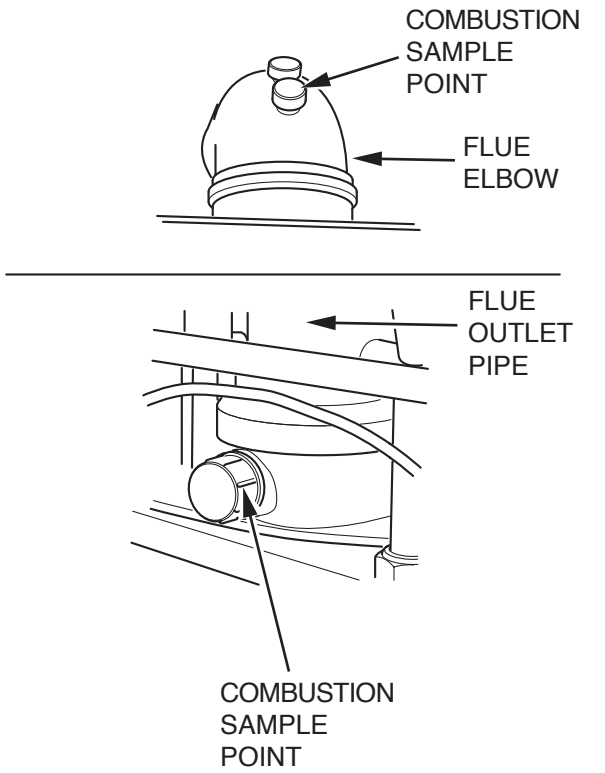

Diagram 13.2

13.3 Burner and Fan

Refer to **diagram 13.4.**

Remove spark electrode lead, heating flow thermistor electrical connections and electrical connections to the fan and gas valve.

Remove gas pipe securing clip.

While supporting the gas valve, fan and silencer assembly, slacken the fan securing plate screw enough to withdraw the securing plate.

Carefully swing the gas valve, fan and silencer assembly out from under the combustion chamber, while supporting the burner. (Take care as the burner will drop down). Remove the burner.

Inspect the burner for any signs of damage.

The burner can be cleaned if necessary by washing in warm soapy water and rinsing with clean water. DO NOT use wire or sharp instruments to clean the holes of the burner.

Examine the fan seal and replace if necessary.

IMPORTANT: Care should be taken when inserting the burner into the heat exchanger chamber and replacing the gas valve, fan and silencer assembly. The fan seal must be seated correctly with the burner before the fan securing plate is refitted.

Refit the fan securing plate, ensure that the dimples are uppermost and that the fork on the plate engages onto the ledge on the heat exchanger chamber, **see inset diagram 13.4**.

13.4 Heat Exchanger

The heat exchanger does not require cleaning during servicing.

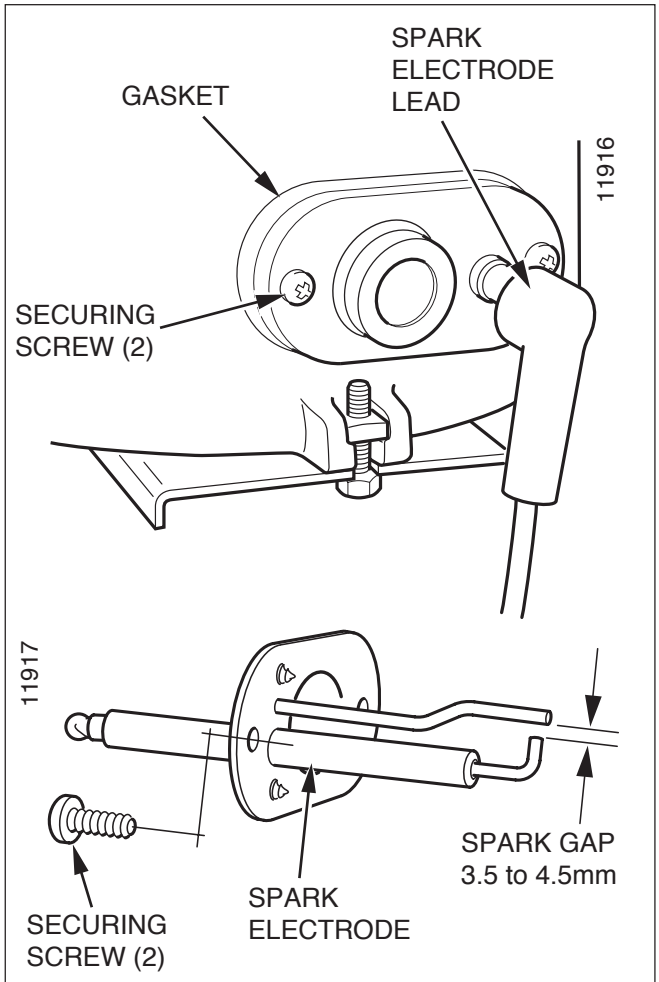

Diagram 13.3

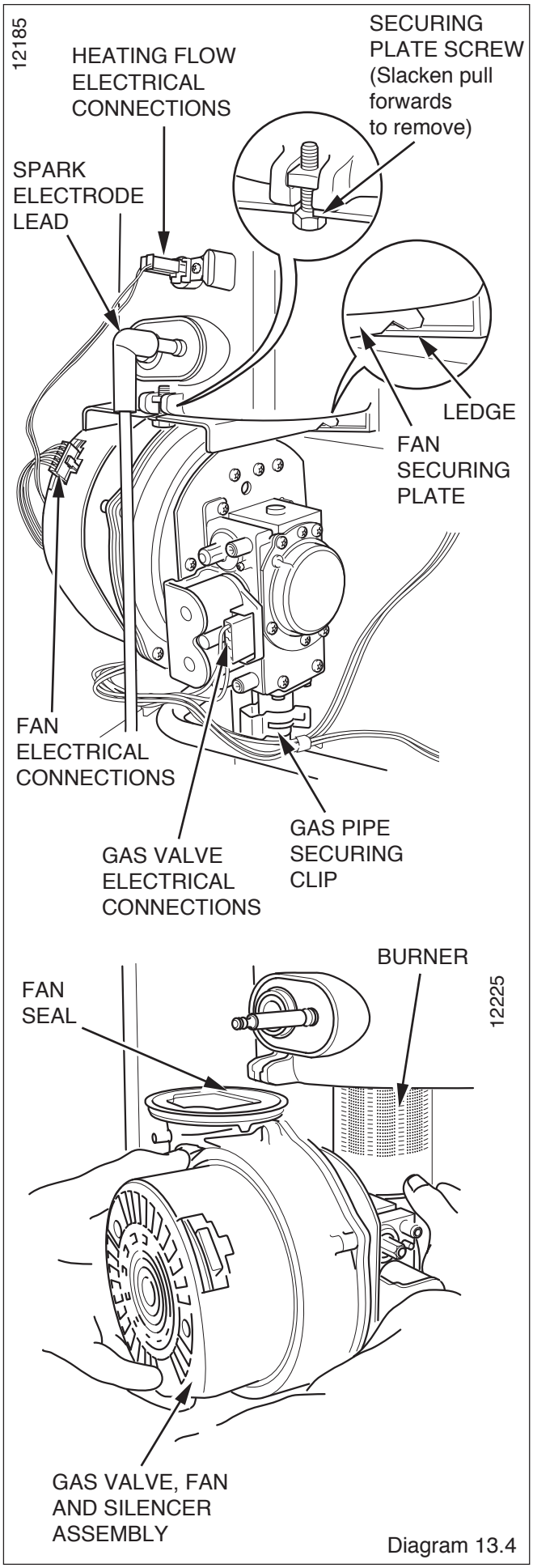

Diagram 13.4

13.5 Condensate Drain

Refer to **diagram 13.5 and 13.6.**

Remove condensate drain pipe.

Slide fixing bracket forward and remove, ease condensate drain down off the inlet connection.

Carefully remove the condense drain taking care not to spill any water which may be in the unit. As the unit is lifted remove the flexible connection on the outlet.

Remove the cap at the base of the condense trap.

Remove any solids found.

Remove the strainer and clean.

Remove the float, clean and check it floats.

Flush water through the trap to remove any remaining solids.

Check for any debris in the outlet pipe of the condensate drain and clean as necessary.

Reassemble and fill the trap with water, refit the condensate drain.

When refitting the cap ensure that a watertight seal is achieved, but do not use excessive force.

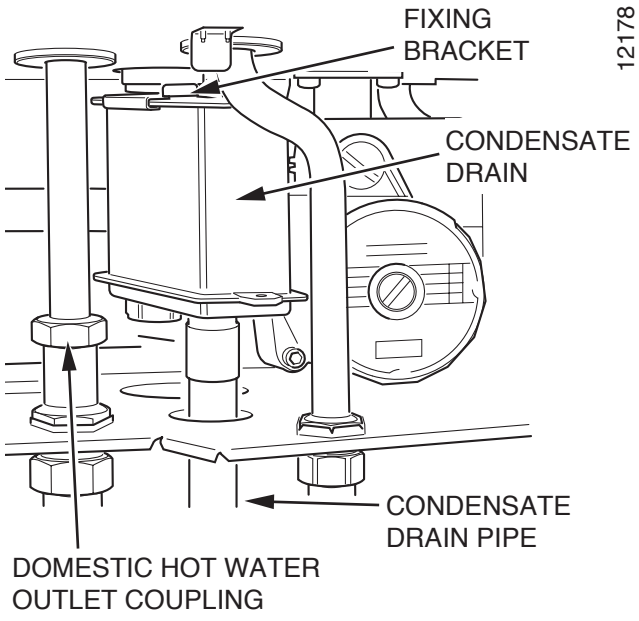

(F24e/F28e SHOWN) Diagram 13.5

13.6 Combustion Check.

Once the appliance has been reassembled (apart from the front and inner casing panels) connect a CO_2 combustion analyser to the sample point on the flue elbow, or alternatively to the point at the base of the flue outlet pipe inside the boiler casing, **see diagram 13.2.**

Turn on the gas service cock, **see diagram 9.2.**

With the power off and the appliance cold, unclip the controls fascia and hinge it down to reveal the potentiometers on the rear of the User interface, **see diagrams 13.7 and 13.8.** Take care not to allow the fascia to drop down and damage the wiring.

Turn on the electrical supply.

Ensure external controls are calling for heat. The boiler should fire automatically.

Allow the boiler to fire for a minimum of 60 seconds and then, using an electrical screwdriver, rotate the service potentiometer fully clockwise, **see diagram 13.8.** This will allow the digital display to indicate the 'flashing' fan speed on the appliance fascia.

In the fully clockwise position the display should be indicating the maximum fan speed of the appliance, this should be 54. Check the CO_2 value, which should be 9.2% ± 0.2%.

Note that with the inner case front panel fitted the combustion readings will increase slightly to 9.3% ± 0.3%.

If adjustment proves necessary then proceed as follows.

Any adjustment to the gas valve should only be carried out by a **competant person**.

Refer to **diagram 13.9.**

Adjust the maximum rate CO_2 with the throttle to 9.2%. (Rotate anti-clockwise to increase).

Rotate the service potentiometer fully anti-clockwise. Hold it in this position for about 5 seconds before rotating the service potentiometer clockwise to the mid-point or 3 o'clock position. The fan should reduce to 1300 rpm which will flash '13' on the LCD display.

Check the CO_2 value, which should be 8.3% ± 0.2%.

If adjustment proves necessary then proceed as follows.

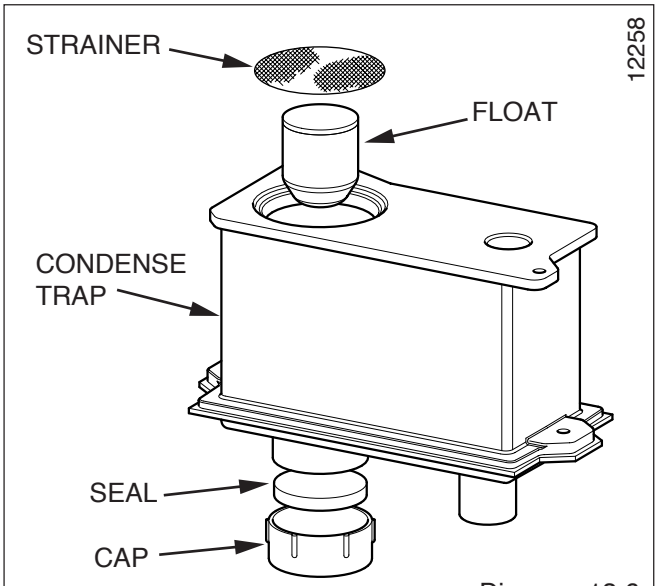

Diagram 13.6

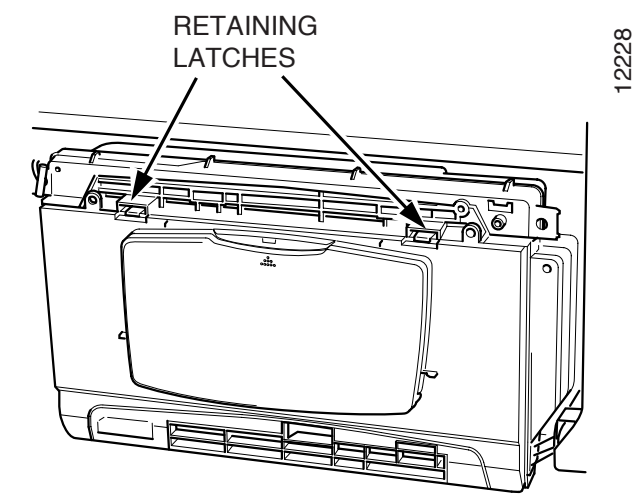

Diagram 13.7

Adjustment of the CO_2 at minimum rate is very coarse so carefully adjust the CO_2 with the offset adjustment to 8.3%, **see diagram 13.9**.

Rotate the service potentiometer fully clockwise, **see diagram 13.8** and recheck the maximum rate combustion, which should be 9.3% ± 0.2%.

After checking combustion rotate the service potentiometer fully anti-clockwise so that the display indicates the water temperature.

Replace the cap on the test point and refit the control cover front panel.

13.7 (F24e & F28e ONLY) Domestic Cold Water Filter

If the water flow rate through the appliance has reduced it may be necessary to clean or replace the filter.

Turn off the electrical supply to the boiler.

Refer to **section 13.10** and drain the domestic hot water circuit.

Undo the plug which holds the filter in its housing and remove the filter to clean or renew if necessary, **see diagram 13.10.**

Replace the filter into its housing and replace plug.

Open the cold water isolating valve and test the Domestic Hot Water circuit for soundness.

Check for leaks.

13.8 (F24e & F28e ONLY) Domestic Cold Water Inlet Filter

If the water flow rate through the appliance has reduced it may be necessary to clean or replace the filter.

Turn off the electrical supply to the boiler.

Refer to **section 13.10** and drain the domestic hot water circuit.

Undo the union nut which holds the filter in its housing and remove the filter to clean or renew if necessary, **see diagram 13.11.**

Open the cold water isolating valve and test the Domestic Hot Water circuit for soundness.

Check for leaks.

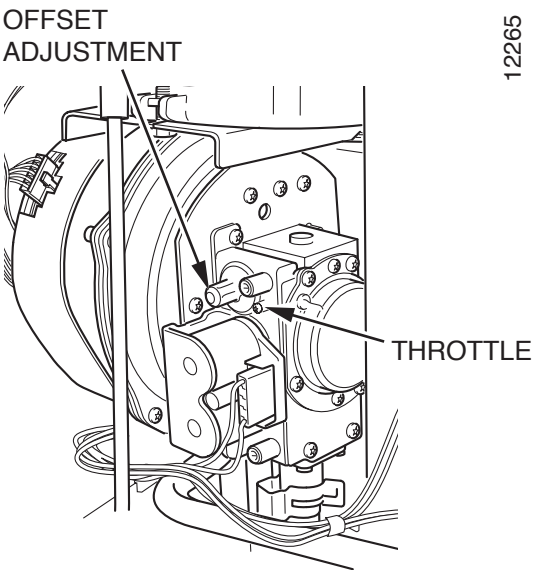

Diagram 13.9

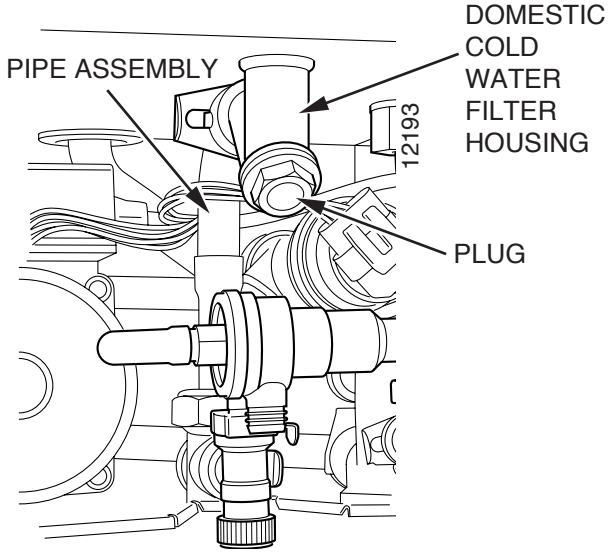

(F24e & F28e ONLY) Diagram 13.10

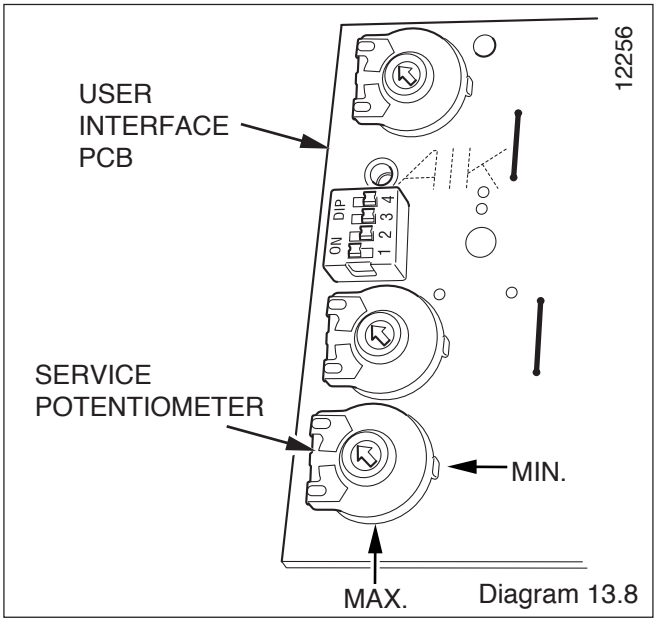

Diagram 13.8

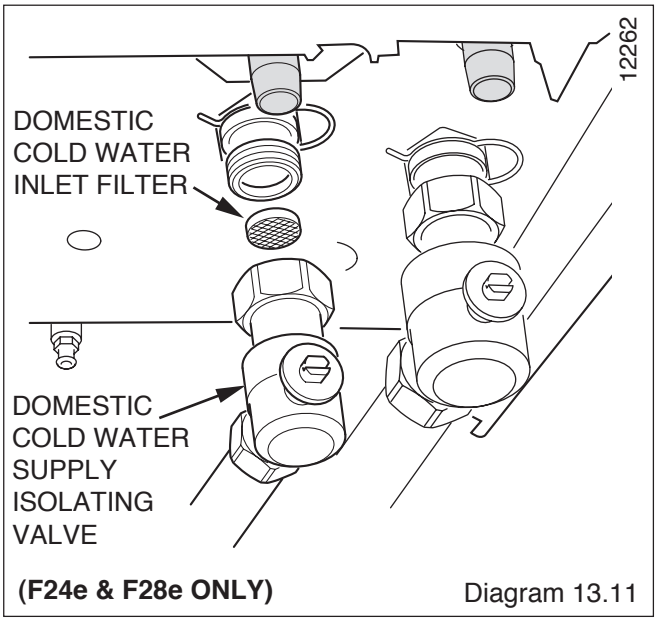

(F24e & F28e ONLY) Diagram 13.11

13.9 Draining of Boiler Heating Circuit

Drain down the Heating Circuit of the boiler only, by closing the heating flow and return isolating valves, **see diagram 9.2.**

Refer to **diagram 13.12.**

Attach a length of hose to the drain point and open the drain valve.

After servicing or replacing parts, close the drain valve and remove the hose. Open the heating flow and return isolating valves and refill, vent and pressurise the heating circuit. See relevant parts of **section 12**.

Check for leaks.

13.10 (F24e & F28e ONLY) Draining of Boiler Hot Water Circuit

Drain the Domestic Hot Water circuit by closing the cold-water isolation valve, **see diagram 9.2.**

Open one or more hot water taps to drain the hot water circuit.

After servicing or replacing parts open the cold-water isolation valve and slowly open a hot water tap to remove air. Close the hot water tap and check for any leaks.

13.11 Inner Casing Panel Seal Check.

Check the condition of the seal, replace as required.

To replace remove the old seal, thoroughly clean the casing sufaces. Fit the new seal, it is supplied to the correct length, **see diagram 13.13.**

13.12 Heat exchanger

Only clean the heat exchanger if the the measured CO_2 cannot be adjusted to the figure specified in **section 13.6**.

Remove the gas supply pipe securing clips. Carefully push the pipe up and turn to the left and down to remove.

Remove the burner and fan, **see section 13.3.**

Using a soft brush clean the inside of the heat exchanger

Do not use a wire brush or tools likely to damage the heat exchanger.

Check the CO_2 value adjust as required, **refer to section 13.6.**

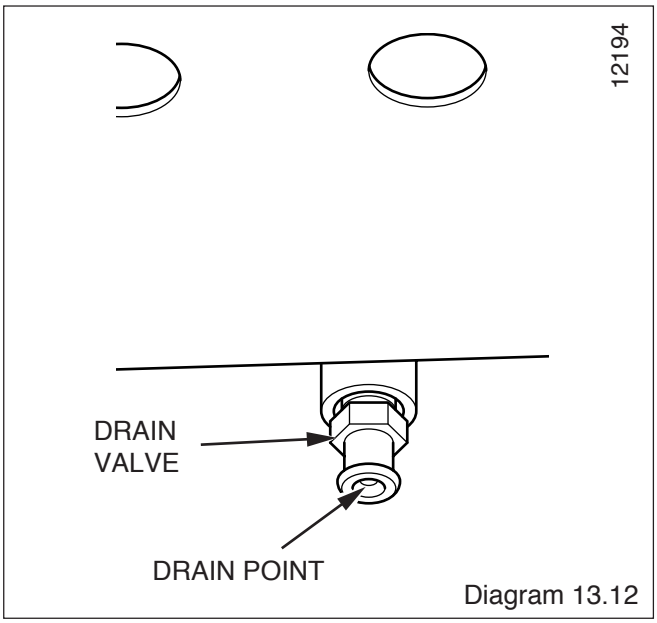

Diagram 13.12

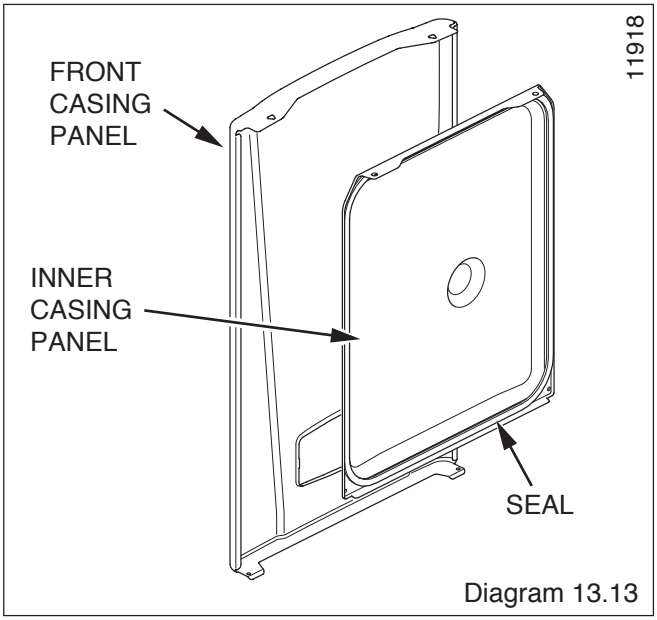

Diagram 13.13

14 Fault Finding

When trying to operate the boiler make sure that :

- All gas supply cocks are open and that the gas supply has been purged of air.
- Electrical supply and water isolation valves are open.

WARNING: Always isolate the boiler from the electrical supply before carrying out any electrical replacement work.

Always check for gas soundness after any service work.

Should there be any doubt about the voltage supply to any of the components, it is possible to carry out a simple electrical test to ensure all is operational in that area.

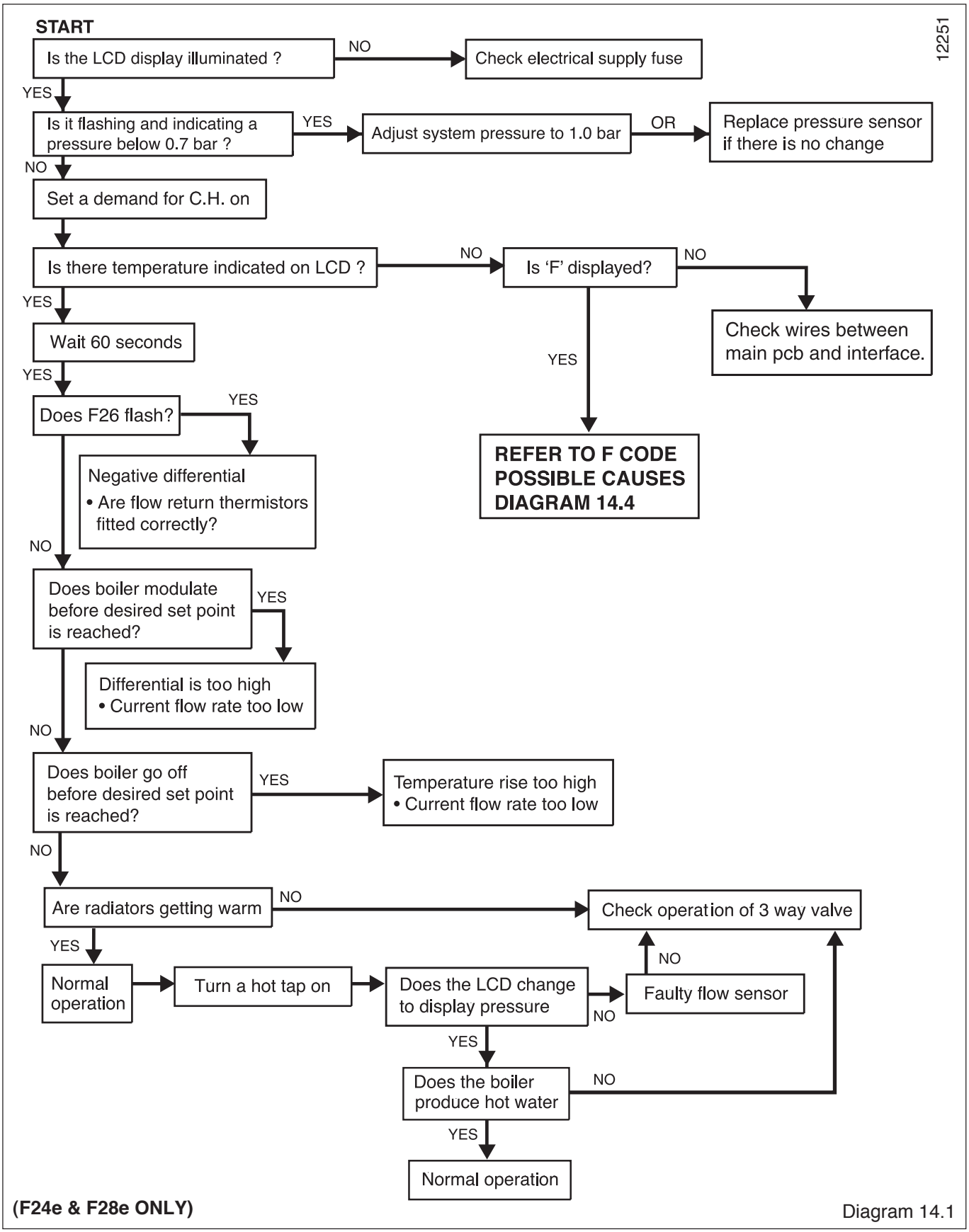

Diagram 14.1

To carry out the electrical test, gain access to the Control Box PCB, as follows:

Hinge down the control box.

Remove Torx screws and unhook the rear panel.

For layout of PCB, **see (F24e / F28e) diagram 15.1 or (F28e SB) diagram 15.1a**

To check components see **(F24e / F28e) Table 1 or (F28e SB) Table 1a .**

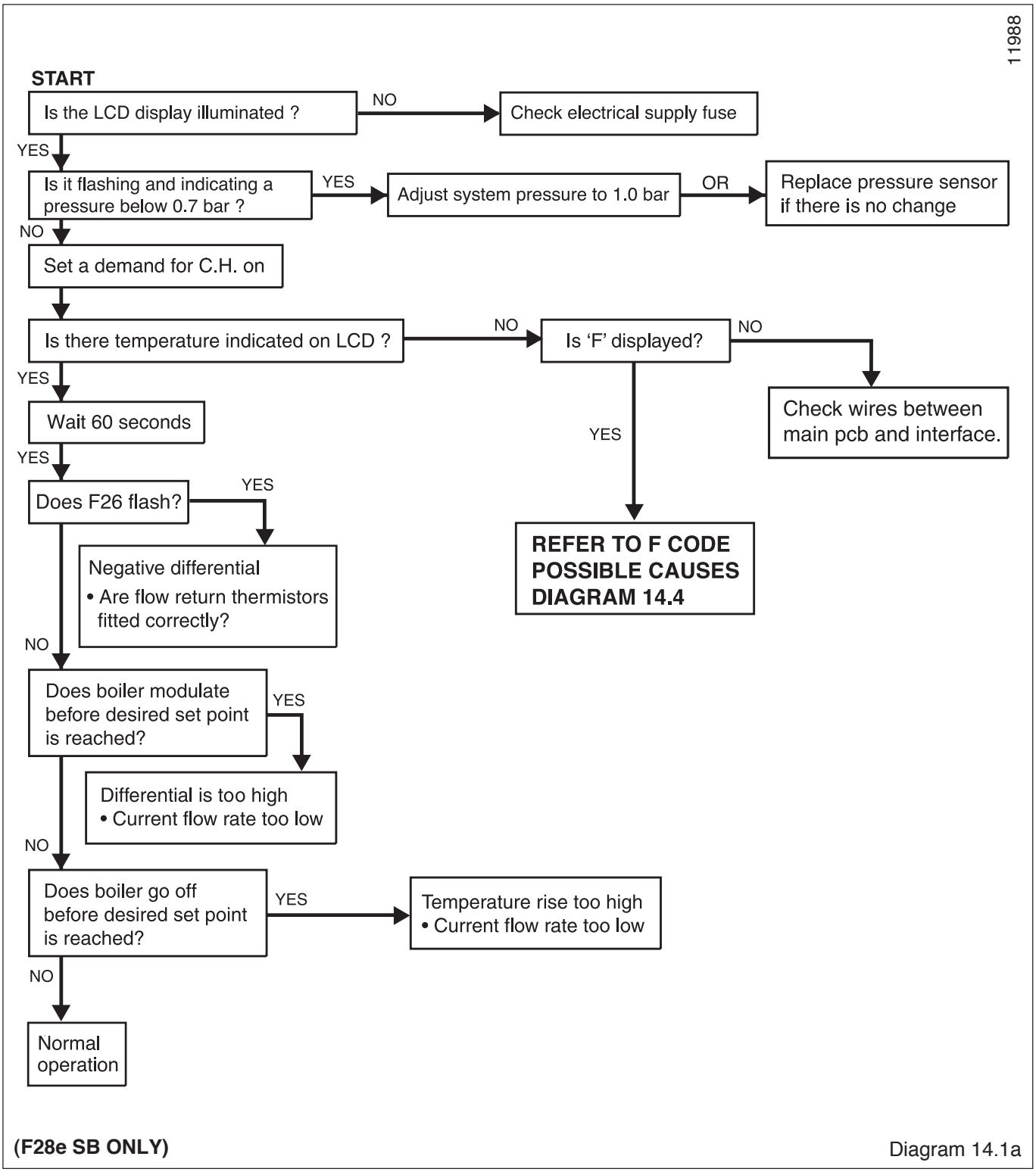

(F28e SB ONLY)

Diagram 14.1a

(F24e / F28e ONLY) Table 1.

COMPONENT	
CH thermistor	10K Ω @ 25°C
Fan	24V DC across blue and red at fan. Check 3.15 A fuse on DC fan supply.
Gas Valve	24V DC / 55 Ω
Flow sensor	Remove and check rotation of paddle wheel

(F28e SB ONLY) Table 1a.

COMPONENT	
C.H. thermistor	10K Ω @ 25°C
Fan	24V DC accross terminals on fan, 40V dc in standby mode, see diagram 14.2. Check 3.15 AT fuse on DC fan supply.
Gas Valve	24VDC/55 Ω

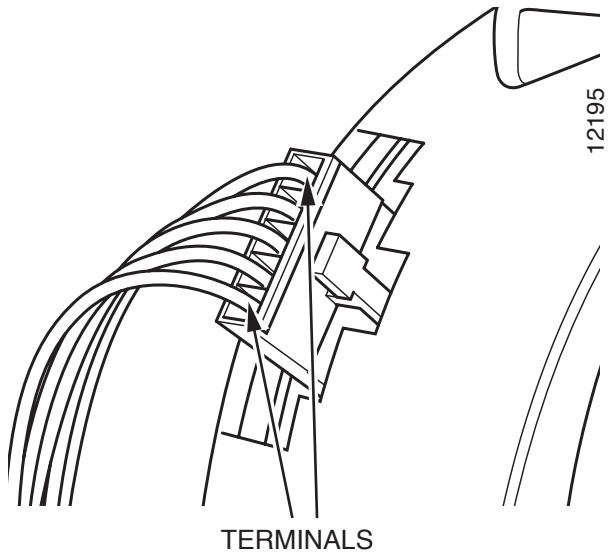

Diagram 14.2

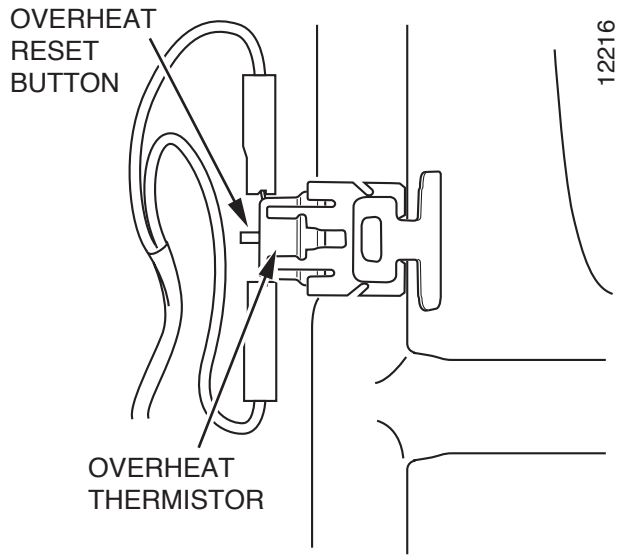

Diagram 14.3

14.1 Overheat Thermistor reset button, see diagram 14.3. Positioned at the rear left under the fan.

12410

code	description	comment
F1	Ignition fault (lockout) Failed to light	No gas; Insufficient gas; Incorrect gas valve adjustment; Electrode defect; Ignition lead defect; Electronic igniter defective; Check air inlet duct; Check connections to igniter unit
F4	Ignition fault (lockout) whilst lit	As F1 possible causes
F5	Overheat fault	Overheat stat operated; Maximum temperature exceeded; Check thermistor connections Air in system with CH temperature at maximum setting Faulty overheat stat connection
F6	Central heating flow NTC fault	Flow NTC cable defective/broken or NTC faulty Flow thermistor not fitted correctly
F7	Domestic Hot Water NTC thermistor fault	NTC cable defective / broken; Check connections; Faulty DHW thermistor
F9	Water pressure sensor fault	Faulty sensor connection; Check wiring
F10	Central heating return NTC fault	Return NTC cable defective/broken NTC faulty Check that thermistor attached correctly to pipe.
F11	Main board disconnected	Check connection to PCB's
F12	User interface disconnected	Check connection to PCB's
F13	Main board fault	Check connection to PCB's
F14	Central heating flow temperature is greater than 95°C	System fault Possible external pump failure Check NTC on flow
F16	Flame detection fault (flame presence for more than 5 seconds after gas valve closed)	Gas valve defective
F17	Power supply is less than 170V	Check electrical supply / polarity
F18	User interface fault	Replace user interface
F19	Central heating NTC thermistor unplugged	Check NTC connection
F20	Software failure	Replace user interface PCB
F24	Central heating return temperature is greater than 90°C	System fault Possible external pump failure Check NTC on return
F25	Maximum temperature rise slope	Air in system restricting movement of water.
F26	Maximum delta temperature	Check NTC on return System fault - too restrictive?

Diagram 14.4

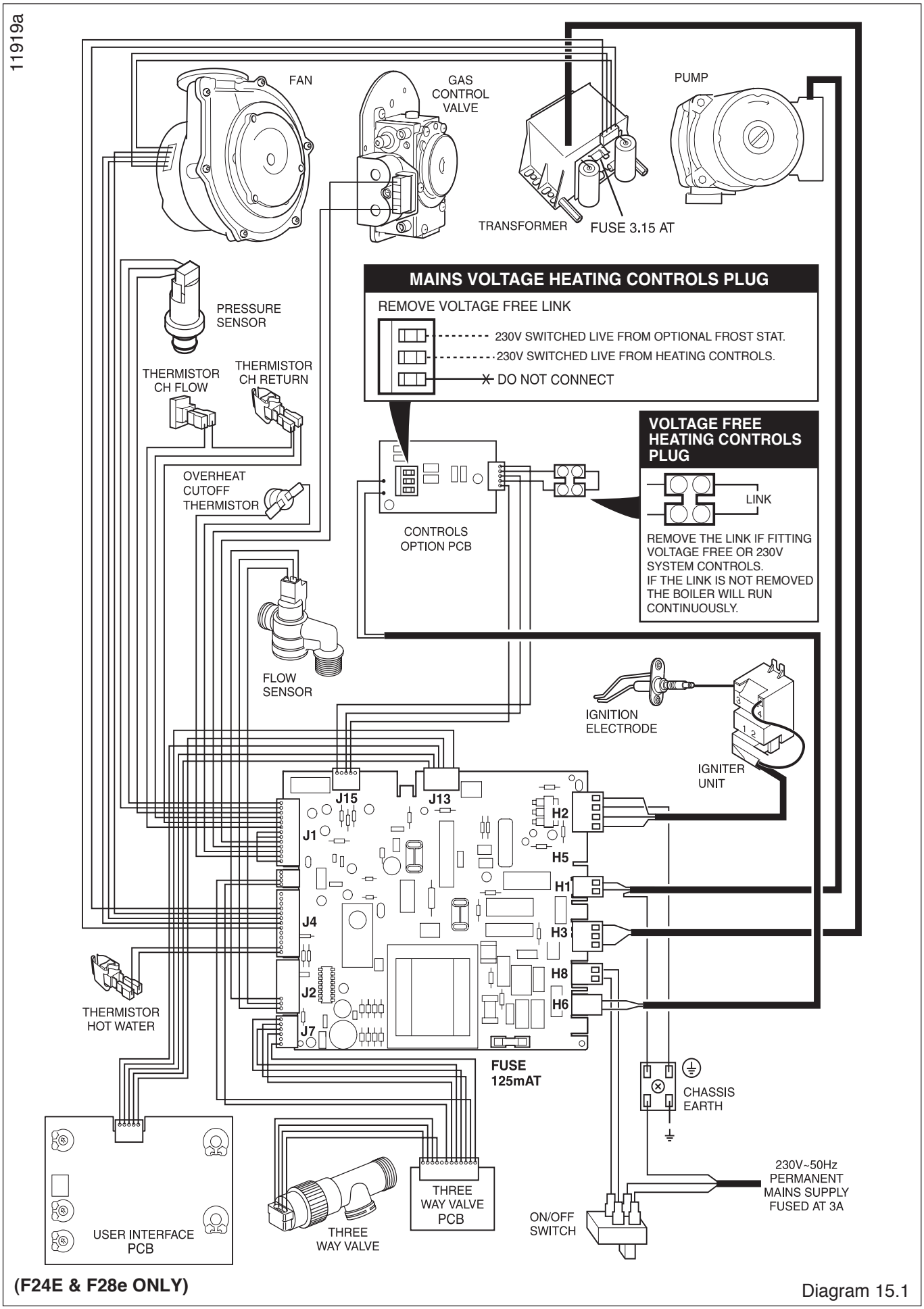

(F24E & F28e ONLY)

Diagram 15.1

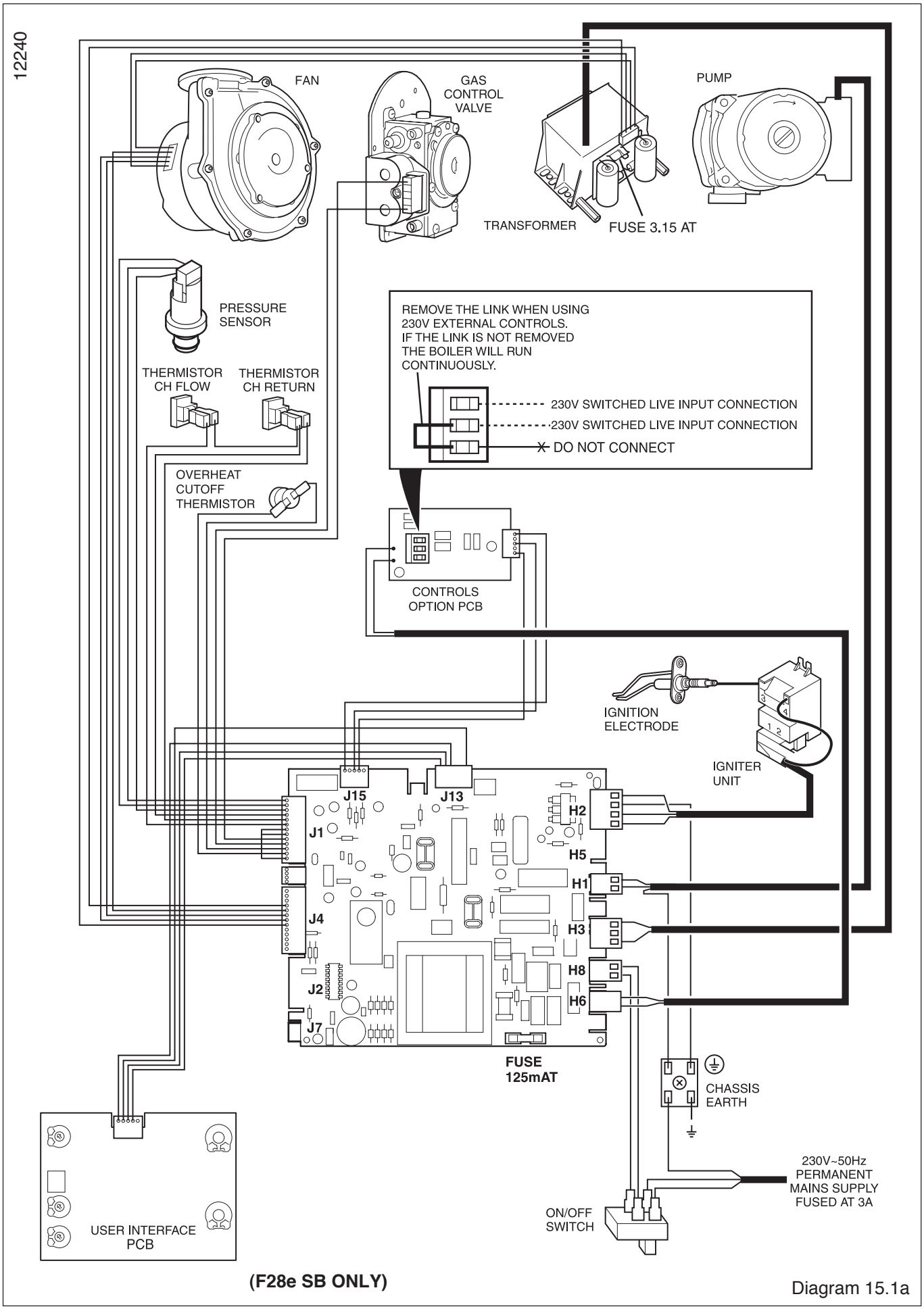

(F28e SB ONLY)

Diagram 15.1a

16.1 General

Replacement of parts must be carried out by a **competent person**.

Before replacing any parts the boiler should be isolated from the mains electric supply and the gas should be turned off at the gas isolation valve on the boiler, **see diagram 9.2.**

Unless stated otherwise parts are replaced in the reverse order to removal.

After replacing any parts always test for gas soundness and if necessary carry out functional test of the controls.

For replacement of parts the front casing and the inner casing panel of the boiler will need to be removed. To remove undo the two screws on the underside of the front casing and lift off. Undo the two screws on the front of the inner front panel and lift off.

The side panels can be hinged sideways to aid replacement of parts.

To hinge a side panel undo and remove the three screws securing each side panel to the boiler, two at the front and one on the top.

16.2 Ignition Electrode

For access, refer to **section 16.1.**

Refer to **diagram 13.3**, remove the ignition electrode lead and two securing screws. Withdraw the ignition electrode carefully from the combustion chamber.

16.3 Igniter Unit

For access, refer to **section 16.1.**

Remove ignition lead and electrical connection then remove igniter unit by removing the securing screw, **see diagram 16.1.**

16.4 Ignition Lead

For access, refer to **section 16.1.**

Refer to **diagrams 13.3 and 16.1.**

Pull the ignition electrode lead off the ignition electrode and the connector to the igniter unit.

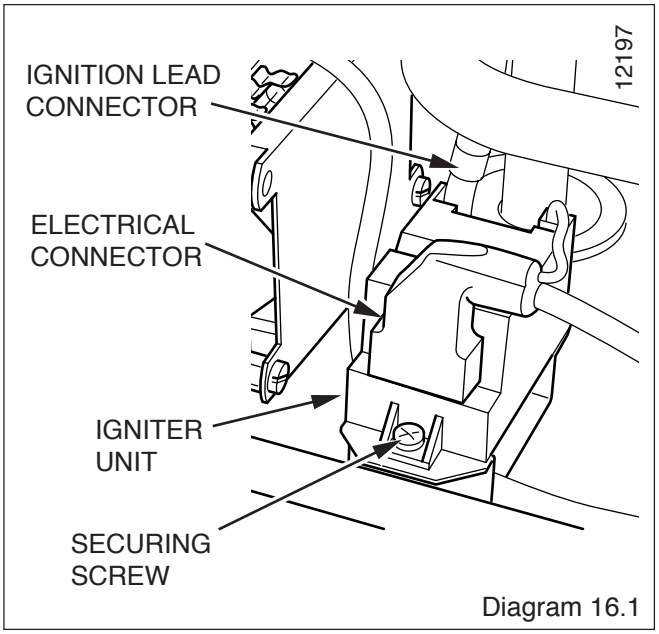

Diagram 16.1

16.5 Transformer

For access, refer to **section 16.1.**

Refer to **diagram 16.2.**

Unplug electrical connection from the transformer.

Drop down control panel and undo the three screws securing rear cover and lift up, **see diagram 11.1.**

Unplug transformer lead from main PCB, **see diagram 16.3.**

Release cable grip located on boiler case.

Undo the screw securing the transformer and unhook from the rear of securing bracket.

Remove transformer and lead.

When reconnecting electrical connection to transformer do not force on connector.

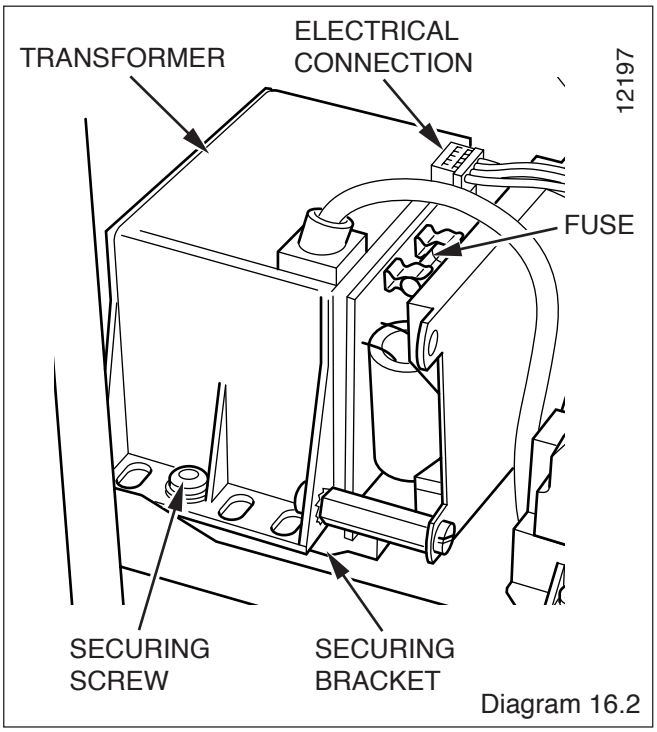

Diagram 16.2

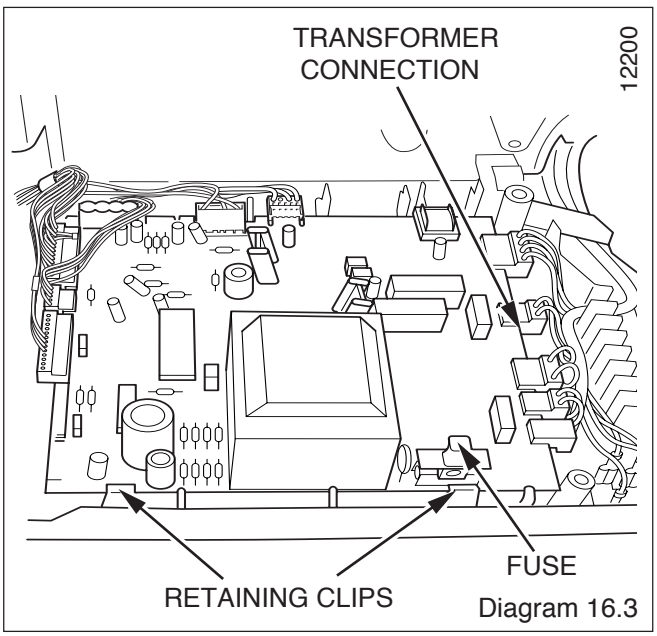

Diagram 16.3

16.6 Gas Control Valve

For access, refer to **section 16.1.**

Refer to **section 13.3** for removal of the fan/gas control valve and silencer assembly.

Remove the gas control valve and plate which is held by the three plate securing screws, **see diagram 16.4.**

After replacing the gas control valve the combustion CO_2 will need to be checked and adjusted if necessary. **See section 13.6.**

16.7 Fan and Silencer

For access, refer to **section 16.1.**

Refer to **section 13.3** for removal of the fan/gas control valve and silencer assembly.

Remove the gas control valve and plate which is held by the three plate securing screws, **see diagram 16.4.**

Unclip silencer box from silencer cover and remove the venturi plate secured with three screws, **see diagram 16.5.**

Check 'O' ring and fan seal and replace if necessary.

16.8 Burner

For access, refer to **section 16.1.**

Refer to **section 13.3** for removal of the fan/gas control valve and silencer assembly.

Replace burner.

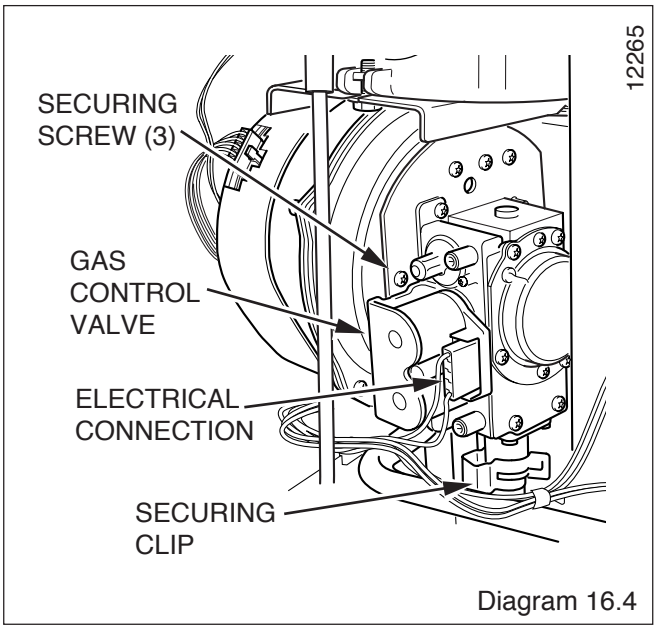

Diagram 16.4

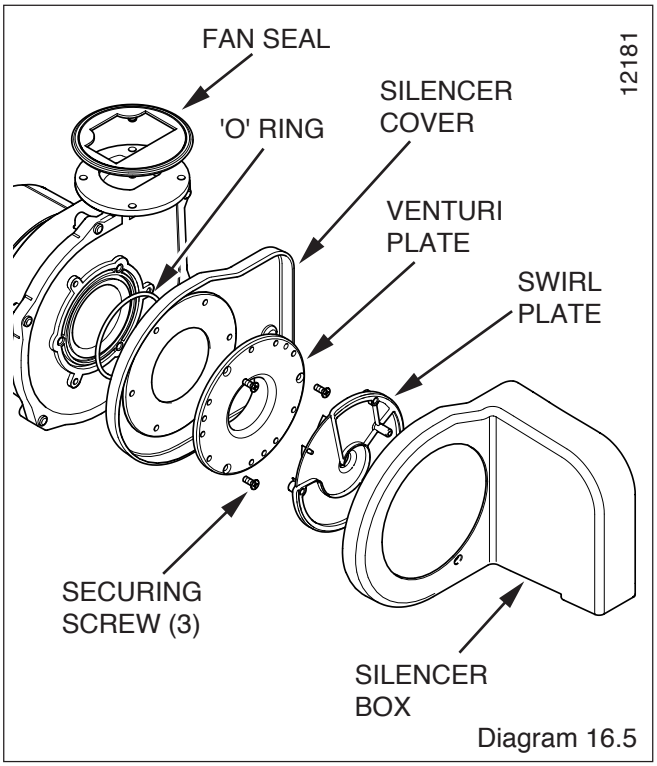

Diagram 16.5

16.9 (F24e/F28e ONLY) Plate to Plate Heat Exchanger

Drain the heating circuit, **see section 13.9.**

Drain the hot water circuit, **see section 13.10.**

Release Rhd. side panel to gain increased access.

Remove retaining clips from water connections, **see diagram 16.6.**

Remove the plate to plate heat exchanger from pipes.

When replacing water connections fit the 'O' rings onto the copper pipe tails, care should be taken not to damage 'O' rings, when securing with retaining clips.

Refill, vent and pressurise the boiler.

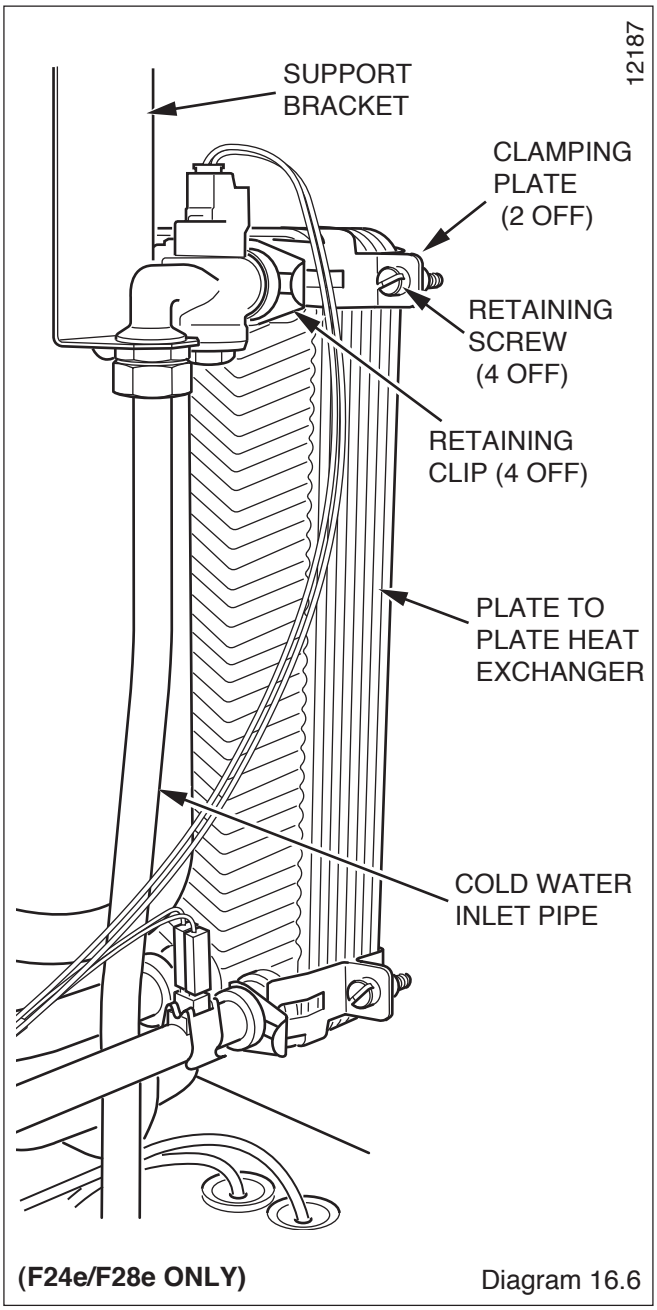

(F24e/F28e ONLY) Diagram 16.6

16.10 Pump (head only)

For access, **refer to section 16.1.**

Drain the boiler heating circuit, **see section 13.9.**

Make sure that the filling loop valves are closed, then proceed as **Section 16.19 (F24e or F28e only).**

Refer to **diagram 16.7.**

Remove the four cap head screws.

Carefully remove the pump head together with cable. Do not strain cable.

Support the pump head, unscrew cable cover at the side of pump head and take off.

Disconnect wiring from pump head.

Reconnect wiring to new pump head and fit cover.

Fit the new pump head with 'O' ring.

Refill, vent and pressurise the boiler.

Check for leaks.

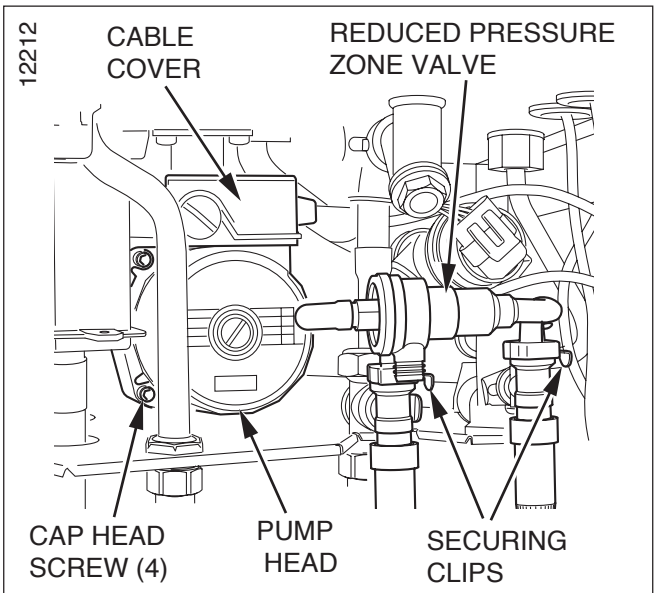

(F24e/F28e ONLY) Diagram 16.7

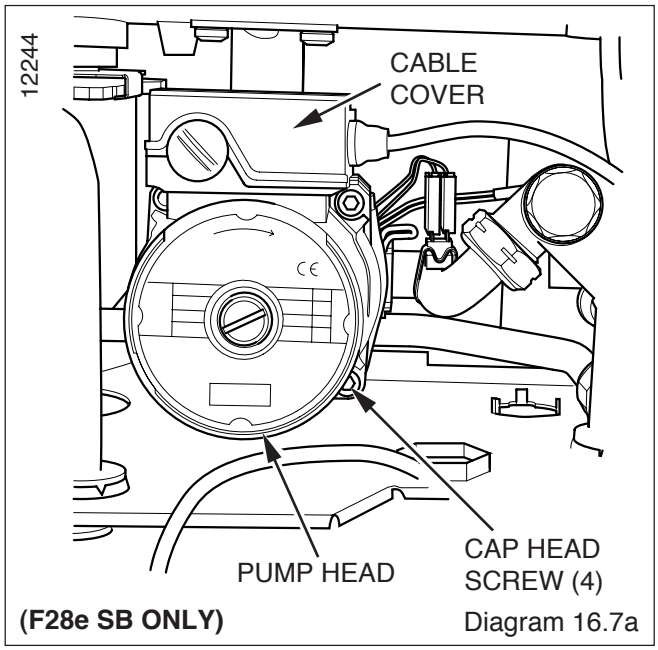

(F28e SB ONLY) Diagram 16.7a

16.11 Expansion Vessel (F24e/F28e ONLY)

For access and to hinge Rhd. side panel, refer to **section 16.1.**

Drain the boiler heating circuit, **see section 13.9.**

Drain the boiler hot water circuit, **see section 13.10.**

Remove Plate to Plate heat exchanger, refer to **section 16.9.**

Disengage flue adaptor pipe, **see diagram 8.6** and remove flue outlet pipe.

Undo coupling and remove cold water inlet pipe, **see diagram 16.6.**

Undo coupling on domestic hot water outlet pipe, **see diagram 13.5.**

Remove Pump head, refer to **section 16.10,** in order to undo coupling at the rear of the three way valve and swing pipe clear of expansion vessel, **see diagram 16.7.**

Refer to **diagram 16.8.**

Undo the coupling at the base of the vessel.

Remove the securing screws on the top panel of the boiler. Remove support bracket.

Draw the vessel up and forward carefully easing the plate to plate pipes clear and remove.

Fit the replacement unit.

Fit a new gasket between the expansion vessel and coupling.

Refill, vent and pressurise the boiler.

Check for leaks.

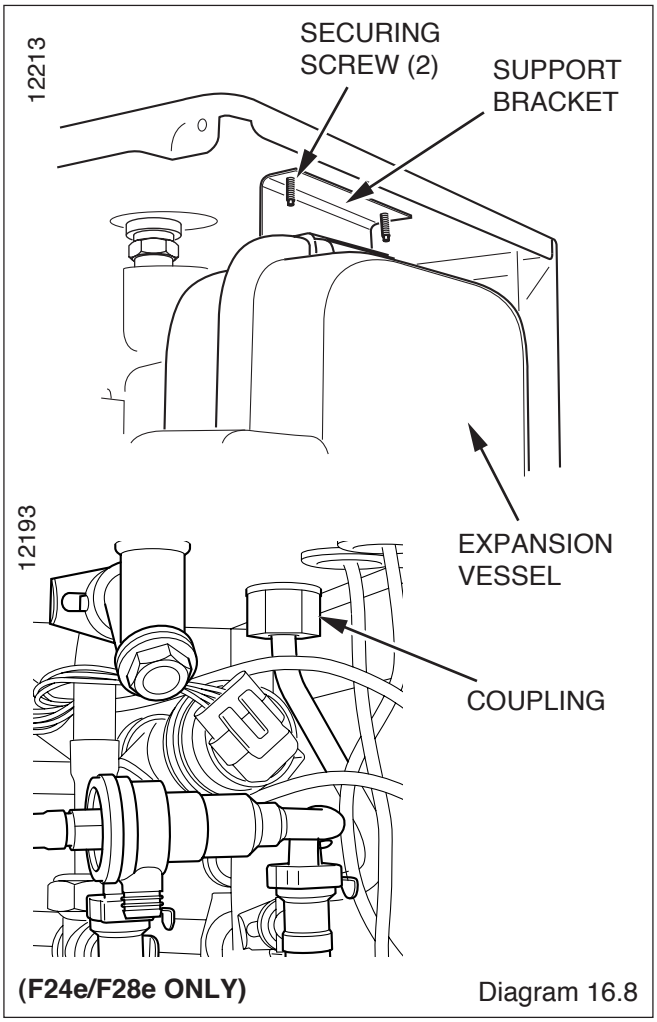

(F24e/F28e ONLY) Diagram 16.8

16.11a Expansion Vessel (F28e SB ONLY)

For access and to hinge R/H side panel, refer to **section 16.1.**

Drain the boiler heating circuit, **see section 13.9.**

Refer to **diagram 16.8a.**

Undo the coupling at the base of the vessel.

Remove the retaining clip securing the expansion vessel supply pipe, pull out the supply pipe.

Remove the securing screw to remove the bottom support bracket.

Remove the securing bolt on the top panel of the boiler. Remove support bracket.

Remove the vessel.

Fit the replacement unit.

Fit a new gasket between the expansion vessel and coupling.

Refill, vent and pressurise the boiler.

Check for leaks.

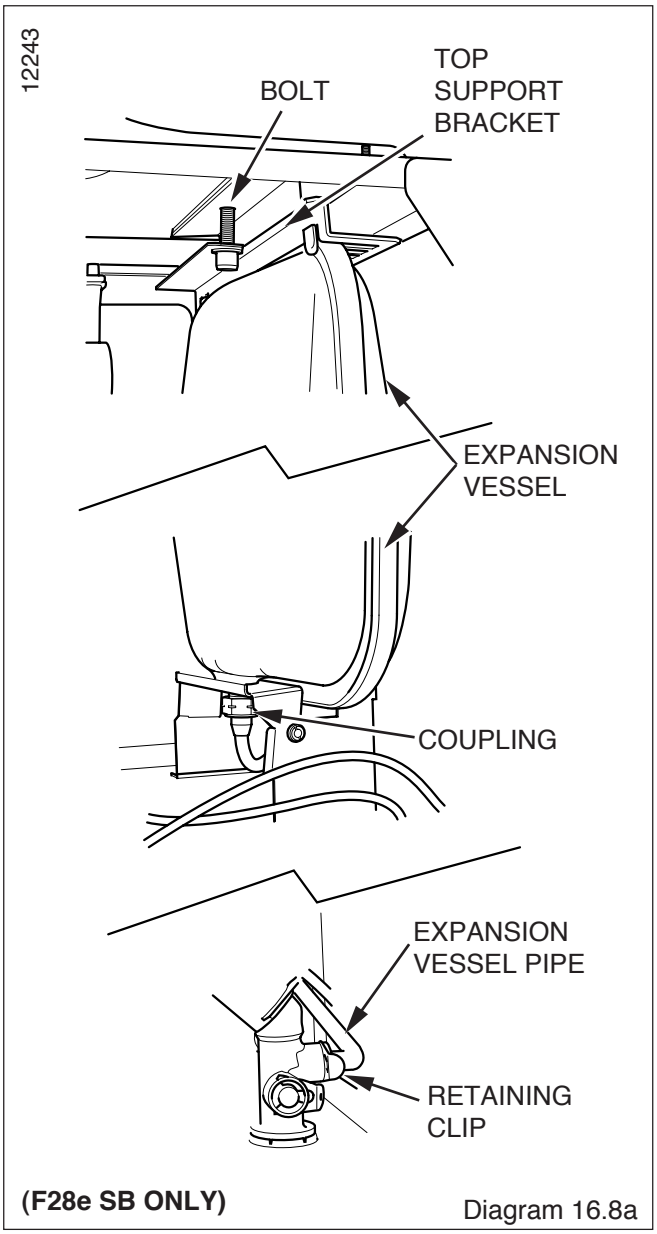

(F28e SB ONLY) Diagram 16.8a

16.12 Safety Discharge Valve

For access, refer to **section 16.1.**

Drain down the heating circuit, see **section 13.9.**

Refer to **section 13.9** and drain the boiler heating circuit.

Refer to **diagram 16.9**

Undo the safety discharge valve coupling and remove from the pipework.

Remove the securing clip and withdraw the safety discharge valve.

Fit new 'O' ring.

Refill, vent and pressurise the boiler.

Check for leaks.

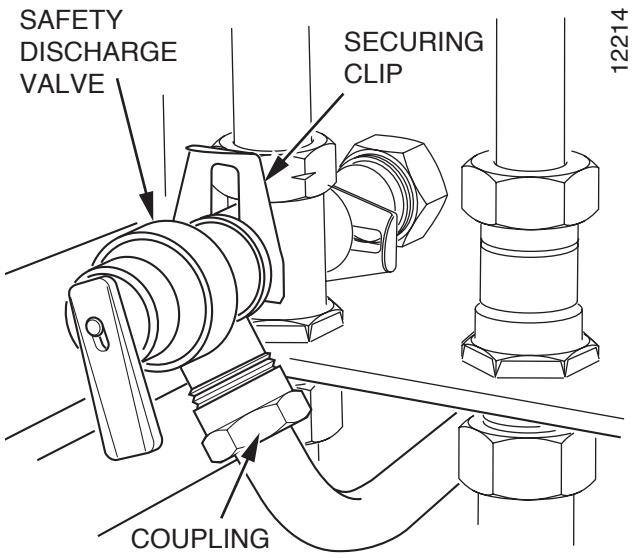

(F24e & F28e SHOWN) Diagram 16.9

16.13 (F24e/F28e ONLY) Domestic Hot Water Thermistor

For access, refer to **section 16.1.**

Refer to **diagram 16.10.**

Remove the electrical connections from the thermistor.

Remove the thermistor and retaining clip.

Fit the replacement thermistor using the heat sink compound supplied.

Note: When reconnecting electrical connections, polarity is not important.

Carry out a functional test of the controls.

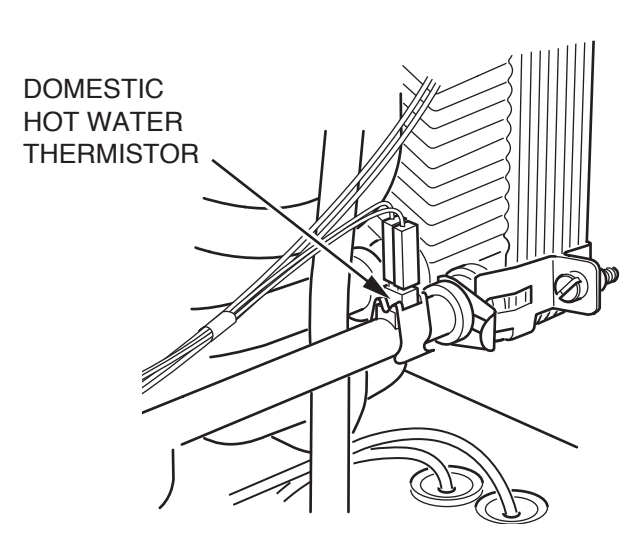

(F24e/F28e ONLY) Diagram 16.10

16.14 Central Heating Flow Thermistor

For access, refer to **section 16.1.**

Refer to **diagram 16.11.**

Remove the electrical connections from the thermistor.

Remove the securing screw from retaining clip.

Fit the replacement thermistor using the heat sink compound supplied, do not overtighten when replacing securing screw.

Note: When reconnecting the polarity of the wiring to thermistors is unimportant.

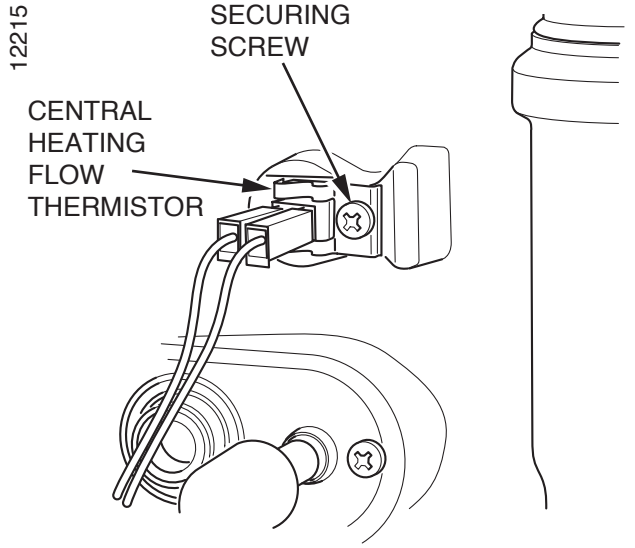

Diagram 16.11

16.15 (F24e/F28e ONLY) Central Heating Return Thermistor

For access, refer to **section 16.1.**

Refer to **diagram 16.12.**

Remove the electrical connections from the thermistor.

Remove the thermistor and retaining clip from the flow pipe.

Fit the replacement thermistor using the heat sink compound supplied.

Note: When reconnecting, the polarity of the wiring to thermistors is unimportant.

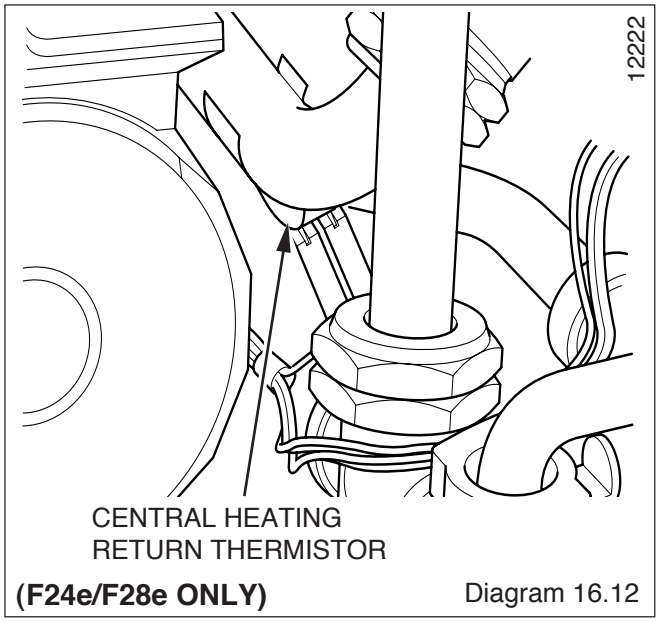

Diagram 16.12

16.15a (F28e SB ONLY) Central Heating Return Thermistor

For access, refer to **section 16.1.**

Refer to **diagram 16.12a.**

Remove the electrical connections from the thermistor.

Remove the thermistor and retaining clip from the flow pipe.

Fit the replacement thermistor using the heat sink compound supplied.

Note: When reconnecting the polarity of the wiring to thermistors is unimportant.

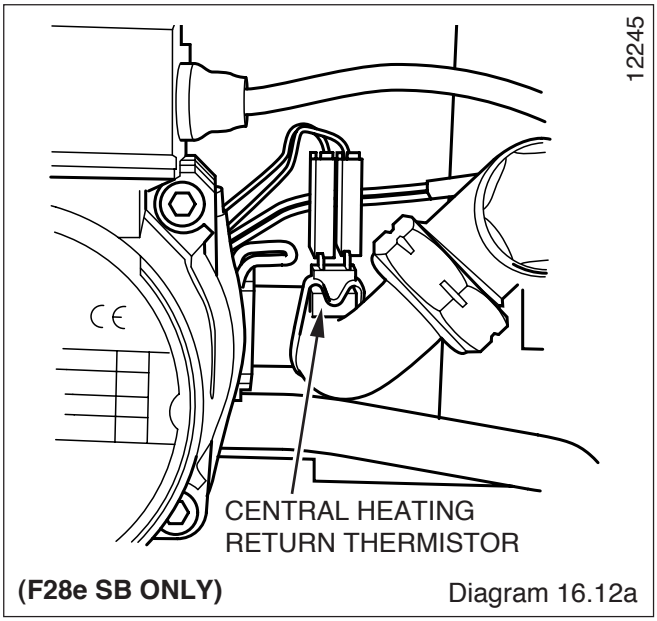

Diagram 16.12a

16.16 Overheat Cutoff Thermistor

For access, refer to **section 16.1.**

Note: It may be necessary to remove transformer refer **to section 16.5.**

Refer to **diagram 16.13.**

Positioned at the rear left under the fan.

Remove the electrical connections from the overheat cutoff thermistor.

Remove the thermistor and retaining clip from the flow pipe.

Fit the replacement thermistor using the heat sink compound supplied.

Note: When reconnecting the polarity of the wiring to thermistor is unimportant.

16.17 Automatic Air Vent

For access, refer to **section 16.1.**

Refer to **section 13.9** and drain the boiler heating circuit.

Refer to **diagram 16.14.**

Unscrew the automatic air vent.

Fit the new automatic air vent and 'O'ring ensuring the vent cap is left loose.

Refill, vent and pressurise the boiler.

Check for leaks.

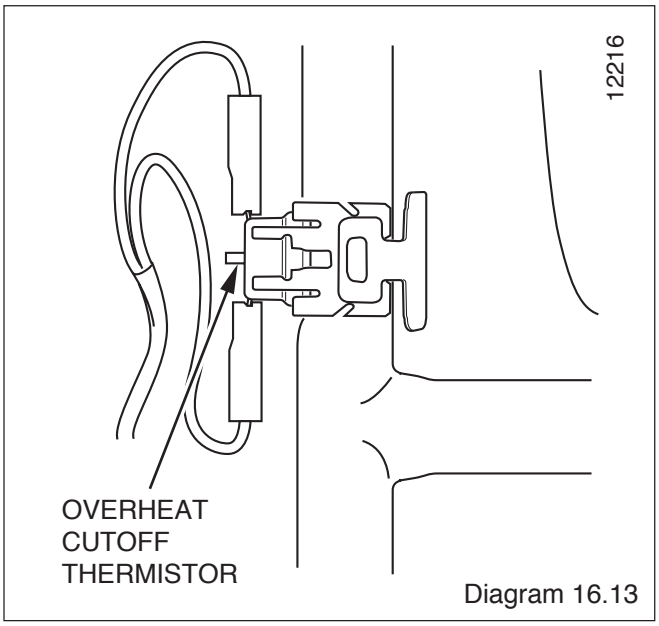

Diagram 16.13

16.18 (F24e/F28e ONLY) Flow Sensor

For access, refer to **section 16.1.**

Refer to **section 13.10** and drain the boiler hot water circuit.

Refer to **diagram 16.15.**

Remove the electrical connection to the flow sensor.

Remove the securing clip between the flow sensor and the plate to plate heat exchanger.

Undo the coupling to the cold water inlet pipe.

Remove flow sensor.

Remove flow restrictor and fit to replacement.

Fit new 'O' rings.

After replacing the flow sensor, open the cold-water isolation valve and slowly open a hot water tap to remove air.

Close the hot water tap and check for any leaks.

16.19 (F24e/F28e ONLY) Reduced Pressure Zone Valve and Filling Loop Tubes Assembly

For access, refer to **section 16.1.**

Refer to **diagram 16.16.**

Remove the retaining clips to remove the reduced pressure zone valve and filling loop tubes assembly.

Fit new 'O' rings.

Replace the reduced pressure zone valve and filling loop tubes assembly, refill, vent and pressurise the boiler.

Check for leaks.

16.20 (F24e/F28e ONLY) Filling Loop Valve.

For access, refer to **section 16.1.**

Refer to **section 13.10** and drain the boiler hot water circuit.

Refer to **diagram 16.16.**

Remove the clip securing the filling loop valve to the domestic water inlet. Disengage by pulling forward.

Remove the clip securing the filling loop to the valve.

Remove the valve from the filling loop.

Fit new 'O' rings.

After replacing the filling loop valve open the cold water isolation valve and slowly open a hot water tap to remove air. Close the hot water tap and check for any leaks.

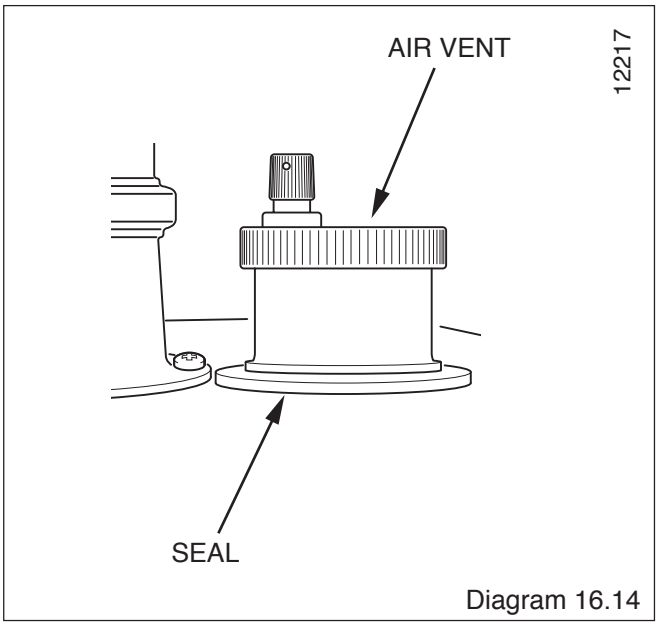

Diagram 16.14

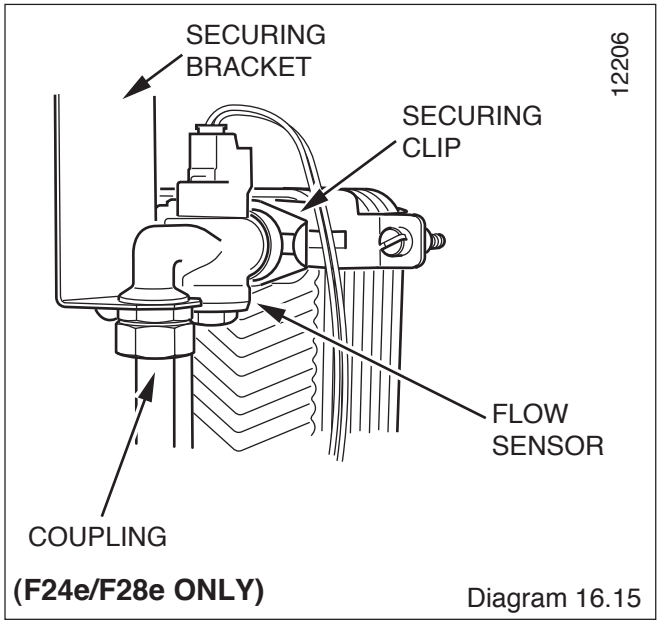

(F24e/F28e ONLY) Diagram 16.15

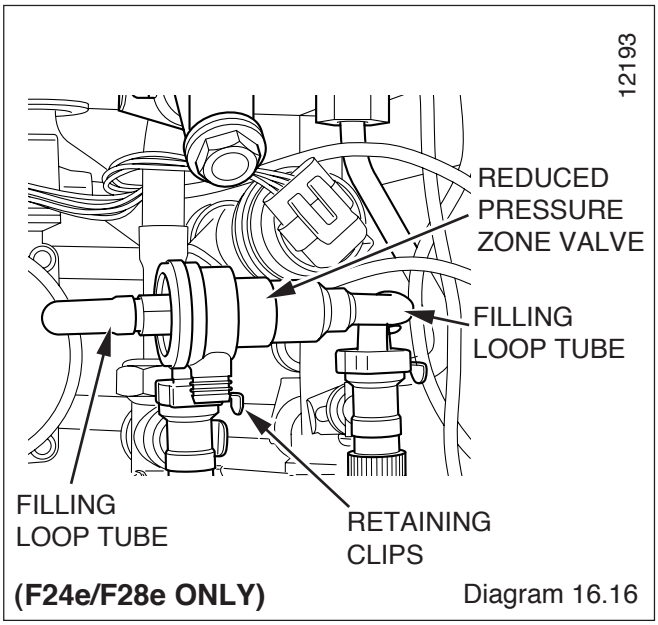

(F24e/F28e ONLY) Diagram 16.16

16.21 (F24e/F28e ONLY) Three Way Valve

Refer to **sections 13.9 and 13.10.**

Remove the Reduced Pressure Zone Valve Refer to **Section 16.19.**

Remove the electrical connection from the three way valve, **see diagram 16.7.**

Remove the pipe assembly from between the cold water inlet isolation valve to cold water filter housing, **see diagram 13.10.**

NOTE: If there is sufficient clearance to remove the right hand side panel and gain access to the rear union connection, it is not neccessary to remove the pump head.

With the pump head removed as **Section 16.10.** Remove the pipe retaining clip and disconnect the two union connections.

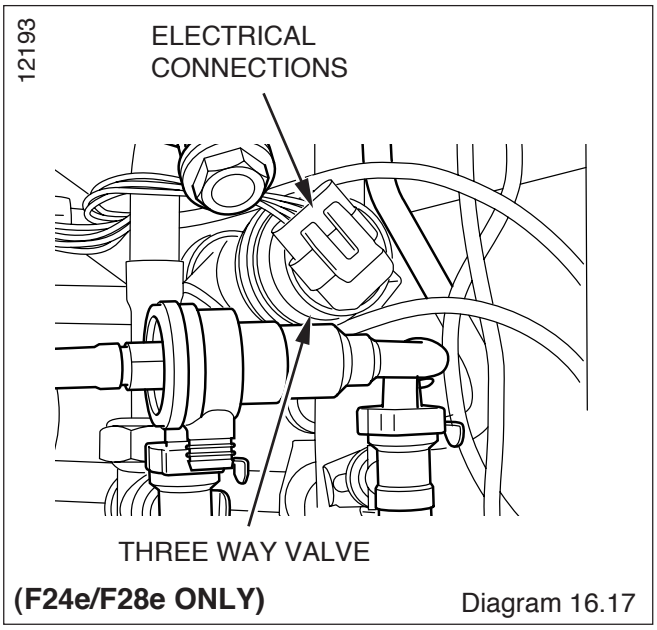

(F24e/F28e ONLY) Diagram 16.17

16.22 (F24e/F28e ONLY) Pressure Sensor

For access, refer to **section 16.1.**

Refer to **section 13.9** and drain the boiler heating circuit.

NOTE: If there is sufficient clearance to remove the right hand side panel and gain access to the rear union connection, it is not neccessary to remove the pump head.

With the pump head removed as **Section 16.10.** Remove the pipe retaining clip and disconnect the two union connections.

Remove the three way valve.

Refer to **diagram 16.18.**

Disconnect the electrical lead by pushing up retaining tab to withdraw the lead plug.

Remove the retaining clip to remove the low water pressure sensor.

Fit new 'O' ring.

Fit the new pressure sensor. Refill vent and pressurise the boiler.

Check for leaks.

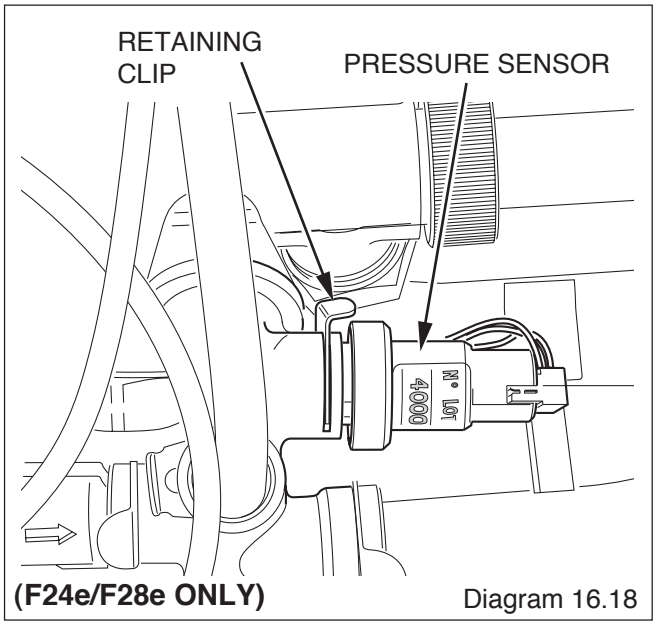

(F24e/F28e ONLY) Diagram 16.18

16.22a (F28e SB) Pressure Sensor

For access, refer to **section 16.1.**

Refer to **section 13.9** and drain the boiler heating circuit.

Refer to **diagram 16.18a.**

Disconnect the electrical lead by pushing up retaining tab to withdraw the lead plug.

Remove the retaining clip to remove the low water pressure sensor.

Fit new 'O' ring.

Fit the new pressure sensor. Refill vent and pressurise the boiler.

Check for leaks.

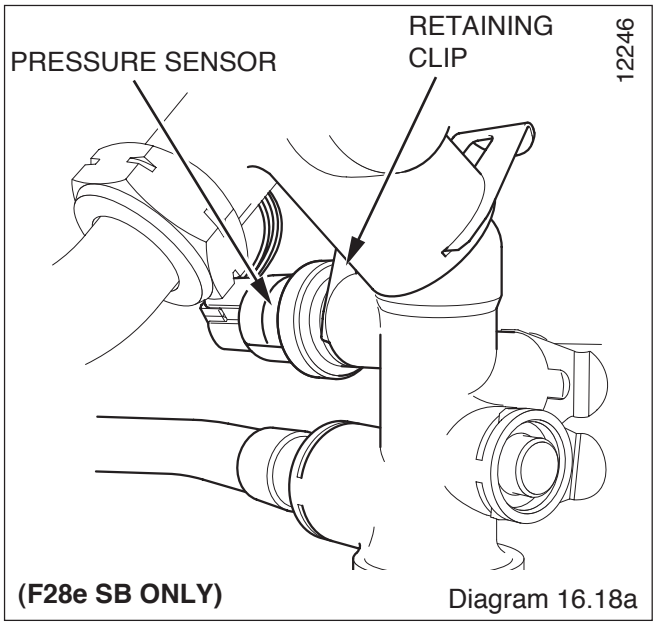

(F28e SB ONLY) Diagram 16.18a

16.23 (F24e/F28e ONLY) Domestic Cold Water Inlet Filter

For access, refer to **section 16.1.**

Refer to **section 13.8.**

Fit new 'O' rings.

16.24 Inner Casing Panel Seal

For access, refer to **section 16.1.**

Refer to **section 13.11.**

16.25 Condense Drain

For access, refer to **section 16.1.**

Refer to **section 13.5.**

16.26 Access to Switches, User Interface and Programmer

For access, refer to **section 16.1.**

Release the front of the fascia by carefully unclipping the two retaining latches, **see diagram 16.19.**

Do not allow the front of the fascia to swing down and be loosely held by the electrical connections. Either remove the connections or support the fascia.

16.27 (F24e/F28e ONLY) Programmer (if fitted)

For access, refer to **section 16.1.**

Remove electrical plug.

Unclip and withdraw programmer.

16.28 Mains Switch

For access, refer to **section 16.1.**

Remove electrical leads and lift the switch cover, **see diagram 16.20**.

Remove switch from housing.

16.29 User Interface Board

For access, refer to **section 16.1.**

Remove electrical plug.

Remove the two securing screws.

Withdraw the board, **see diagram 16.21.**

When replacing the board refer to instructions supplied with replacement PCB on setting it up.

16.30 (F24e/F28e ONLY) Three Way Valve PCB

Refer to **section 16.1** for access.

Drop down control panel and undo the three screws securing rear cover and lift up, **see relevant part of diagram 11.1.**

Remove electrical plug.

Remove the two securing screws.

Withdraw the board, **see diagram 16.22.**

16.31 Main PCB

For access, refer to **section 16.1.**

Drop down control panel and undo the three screws securing rear cover and lift up, **see relevant part of diagram 11.1.**

Remove the electrical connections to the PCB.

Prise back the two PCB retaining clips and withdraw the PCB, **see diagram 16.22.**

When refitting the rear panel ensure the leads are not trapped.

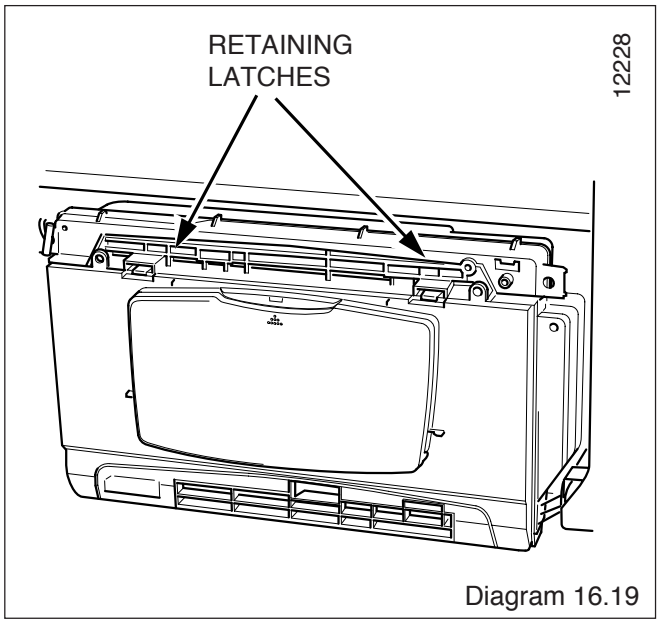

Diagram 16.19

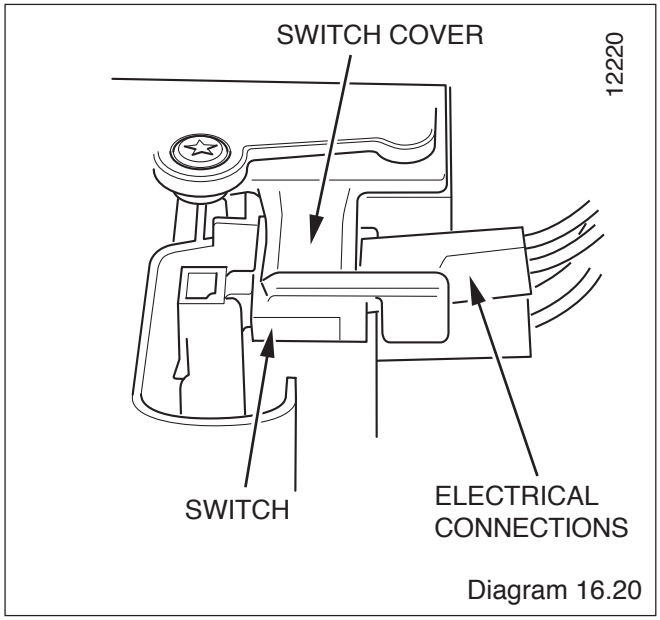

Diagram 16.20

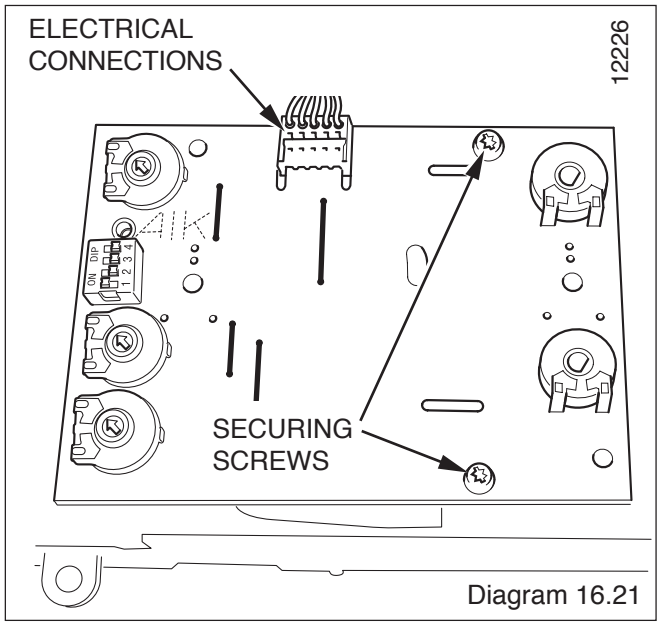

Diagram 16.21

16.32 Control Box

For access, refer to **section 16.1.**

Remove relevant plugs and connectors, refer to wiring diagrams **section 15.**

Withdraw grommets and leads so they are hanging loose.

Unthread the retaining cord and remove the control box by drawing it outwards away from its retaining slots, **see relevant part of diagram 11.1.**

16.33 Fuses PCB - Control Box

Remove the front casing, refer to the relevant part of **section 16.1.**

Drop down the control panel and undo three screws securing the rear cover and lift up, see relevant part of **diagram 11.1.**

Remove the fuse holder from the mainPCB and replace fuse, **see diagram 16.22**.

PCB - Transformer

For access, refer to **section 16.1.**

Refer to **diagram 16.2** and wiring diagrams **section 15.**

Replace fuse.

16.34 230V Controls Option

For access, refer to **section 16.1.**

Gain access to the 230v controls optionPCB by unclipping the control panel interface and carefully lowering forward, **see diagram 11.3.**

Disconnect the electrical connection from the 230V controls option PCB and the electrical connection from the main PCB.

Remove the 230V controls interface retaining screw.

Remove the 230V controls option PCB, **see diagram 16.23.**

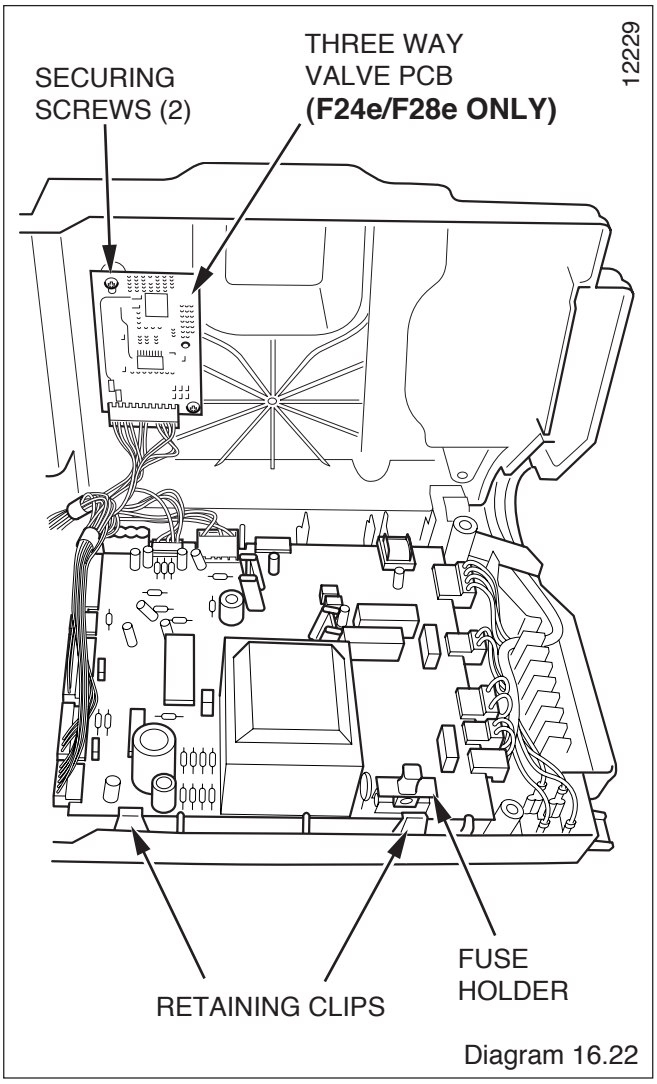

Diagram 16.22

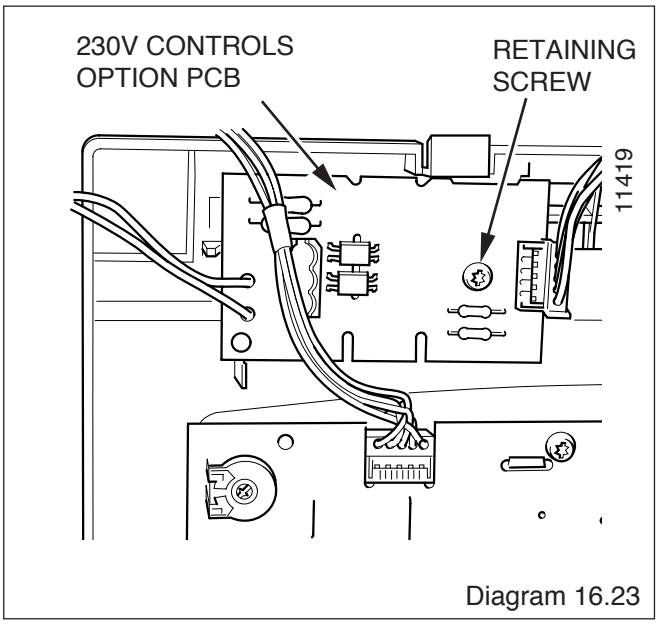

Diagram 16.23

16.35 Heat Exchanger

Refer to **section 16.1.**

Drain the boiler heating circuit, **see section 13.9.**

Drain the boiler hot water circuit, **see section 13.10.**

Remove the flue elbow, water and gas connections at the bottom of the boiler, any electrical connections.

Lift the boiler up and off the hanging bracket, carefully lay the boiler on its back on the floor.

IMPORTANT: With regards to the Manual Handling Operations, 1992 Regulations, the following lift operation exceeds the recommended weight for a one man lift.

Carefully pull up turn and pull forward to remove the flue duct.

Remove the spark electrode, **see section 13.2.**

Remove the central heating flow thermistor, **see section 16.14.**

Remove the igniter unit, **see section 16.3.**

Remove the transformer, **see section 16.5.**

Remove the burner and fan, **see section 13.3.**

Unclip and remove the gas supply pipe.

Remove the condensate trap, **refer to the relevant part of section 13.5.**

(F24E & F28e ONLY) Remove the plate to plate heat exchanger, **see section 16.9.**

(F24E & F28e ONLY) Remove the domestic hot water pipe from the boiler at the domestic hot water connector and the electrical connections to the thermistor.

(F24E & F28e ONLY) Remove the domestic cold water supply pipe from the boiler.

Disconnect the overheat cutoff thermistor electrical connections, **see diagram 16.13.**

Remove the central heating flow pipe from the boiler.

Remove the syphon adapter, **see diagram 16.24.**

Remove the pump with it's housing. To remove disconnect securing nut and securing wire clip, **see diagram 16.25.**

Remove the two screws securing the pump connector carefully lever/pull down to remove the pump connector from it's housing, **see diagram 16.26.**

(F24E & F28e ONLY) Disconnect flow sensor electrical connections, **see diagram 16.15.**

Unscrew to remove the air vent from the top of the boiler.

Lift the heat exchanger up and ease forward to remove.

IMPORTANT NOTES.

When re-fitting parts ensure all grommets are fitted correctly.

Check all 'O' rings and sealing washers, replace as required.

Ensure all securing clips are seated correctly.

Commission the boiler on completion, **refer to section 12.**

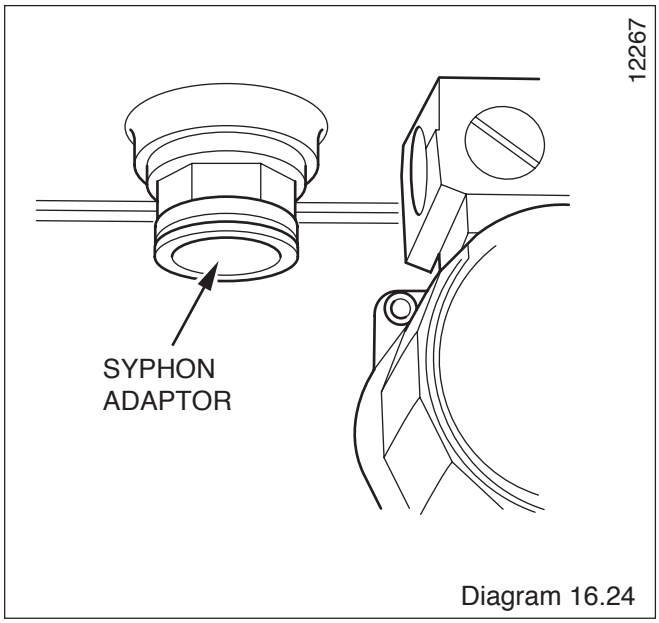

Diagram 16.24

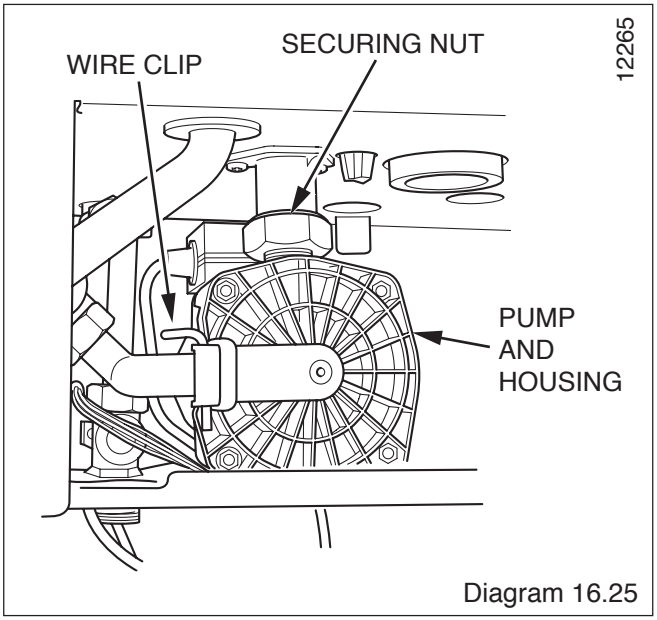

Diagram 16.25

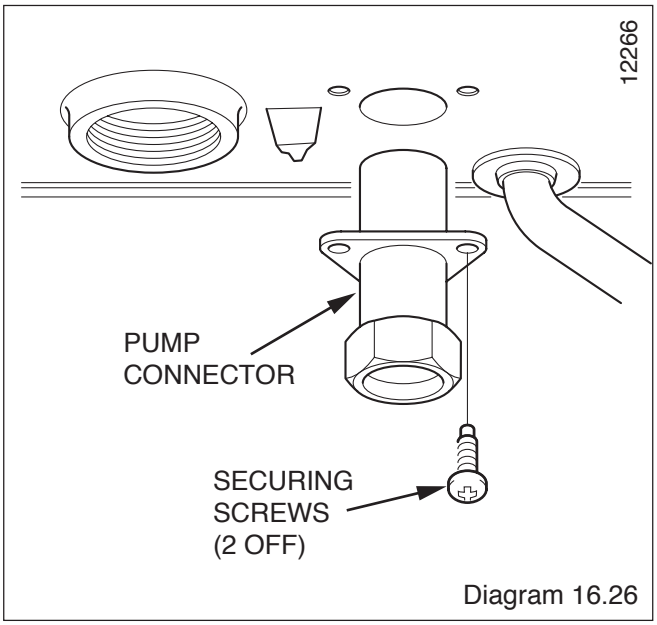

Diagram 16.26

17 Spare Parts

When ordering spare parts, contact Saunier Duval service organisation using the telephone number on the inside front cover of this booklet.

Please quote the name of the appliance and serial number, to be found on the data label.

If ordering from British Gas also quote the G.C. number of the part.

Key No.	Part No.	Description	GC Part No.
1	2000802521	Transformer	H17-674
2	2000802218	Overheat Cutoff Thermistor	H17-653
3	2000801911	Pressure Sensor	E83997
4	2000802777	(F24e ONLY) Plate to Plate Heat Exchanger	H19-988
4	2000802211	(F28e ONLY) Plate to Plate Heat Exchanger	H17-628
5	802227	(F24e/F28e) Three Way Valve	H17-671
6	802200	Electrode	H17-596
7	2000802107	Safety Discharge Valve	H17-683
8	S801068	Automatic Air Vent	E24302
9	802261	Three Way Valve Interface PCB	H17-791
10	802199	Flow Thermostat	H17-594
11	801722	C.H. Flow Thermistor	E84003
11a	802250	D.H.W. Thermistor (F24e/F28e)	H17-827
12	802265	Gas control valve	H17-619
13	802266	Flow Sensor	H17-721
14	801655	Igniter Unit	E84015
15	2000802120	230V Controls Option PCB	H19-989
16	802259	Main PCB	H17-679
17	802226	Pump	H17-664
18	802260	Interface Board (F24e/F28e)	H17-746
18	802281	Interface Board (F28e SB)	H17-713
19	2000802204	Fan	H17-618
20	S801039	Burner (F24e)	E24257
20	S801142	Burner (F28e)	E24426

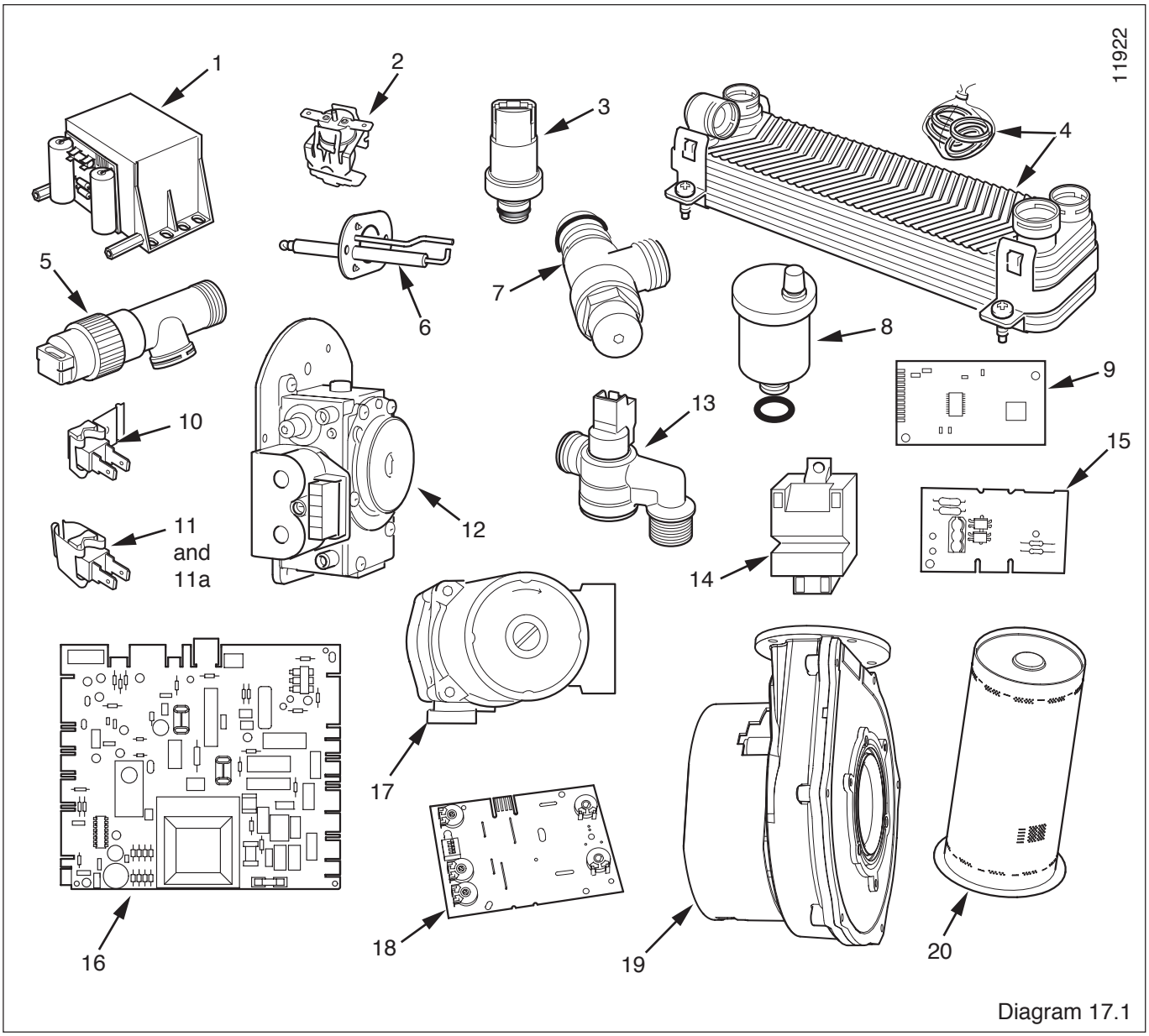

Diagram 17.1

Because of our constant endeavour for improvement, details may vary slightly from those shown in these instructions.